Submittal Data Information
FE Series Pumps

301-812

EFFECTIVE: MAY 1, 1993 SUPERSEDES: NEW **1760 RPM** MODEL 1206

JOB _____

ENGINEER _____

CONTRACTOR _____ REP. _____

ITEM NO.	MODEL NO.	IMPELLER DIA.	G.P.M.	HEAD/FT.	H.P.	ELEC. CHARS.

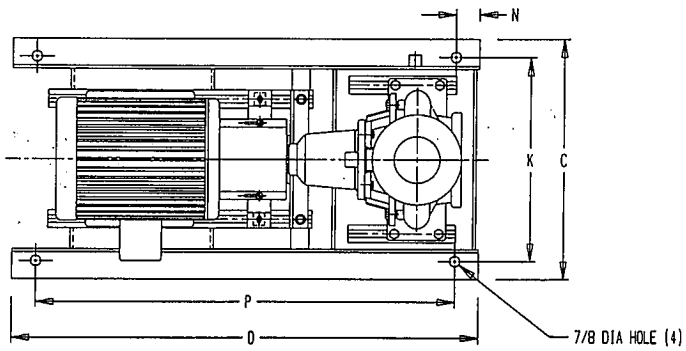

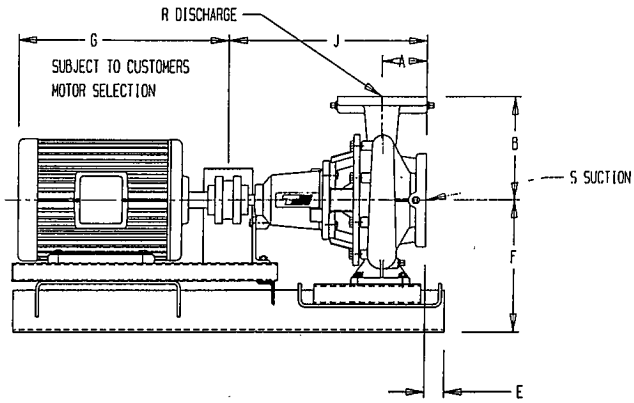

50 Cycle Performance Curves attached when applicable.

Model No.	HP 1160 RPM	HP 1760 RPM	HP 3500 RPM	Motor Frame	A	B	C	D	E	F	J	K	N	P	R	S
1206		1/2, 3/4		56	2-15/16	5-11/32	16	32	1-1/2	7-29/32	15-21/32	14	2	28	1-1/4	2
		1	1-1/2	143T												
			2, 3	145T				32						28		
			5	182T												
			7-1/2	184T												

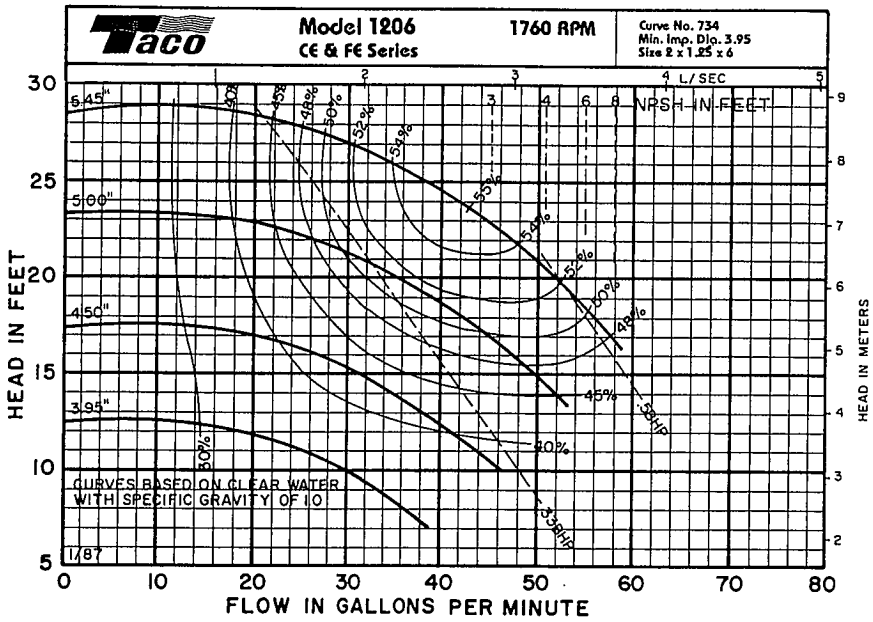

WEIGHT_____PUMP/MOTOR

Item	BRONZE FITTED		ALL IRON	
	Std. Pump Constr.	Optional	Standard	Optional
Casing	Cast Iron ASTM A48 Cl. 35		Cast Iron ASTM A48 Cl. 35	
Impeller	Bronze ASTM B30-4A		Cast Iron ASTM A48 Cl. 35	
Wear Ring	Bronze ASTM B30-4A		Bronze ASTM B30-4A	
Shaft	Carbon Steel AISI 1045	St. Steel AISI 416	Carbon Steel AISI 1045	St. Steel AISI 416
Shaft Sleeve	Bronze SAE 660	St. Steel AISI 416	St. Steel AISI 416	
Mech. Seal	Ceramic	Tungsten Carbide	Ceramic	Tungsten Carbide
Seal Flush Line		Copper		Copper

OPERATING SPECIFICATIONS		
	Standard	Optional
Pressure	175 PSIG*	
Temperature: Mechanical Seal	250F	300F

Motors: All NEMA Standard (T or TS)

* In accordance with ANSI Standard B16.1 Class 125

ADDITIONAL OPTIONS	
Filters	Cuno 5 Micron
Separators	Kynar Cyclone Separator
Couplings	Spacer Type

COMMENTS: _____

TACO, INC., 1160 Cranston Street, Cranston, RI 02920 (401) 942-8000 FAX: (401) 942-2360.
TACO (Canada), Ltd., 1310 Almco Blvd., Mississauga, Ontario L4W1B2. Telephone: 416/625-2160. FAX: 416/625-8616.

Printed in USA
Copyright 1993
TACO, INC.

Submittal Data Information
FE Series Pumps

301-813

EFFECTIVE: MAY 1, 1993 SUPERSEDES: NEW **1760 RPM** MODEL 1207

JOB _____

ENGINEER _____

CONTRACTOR _____ REP. _____

ITEM NO.	MODEL NO.	IMPELLER DIA.	G.P.M.	HEAD/FT.	H.P.	ELEC. CHARS.

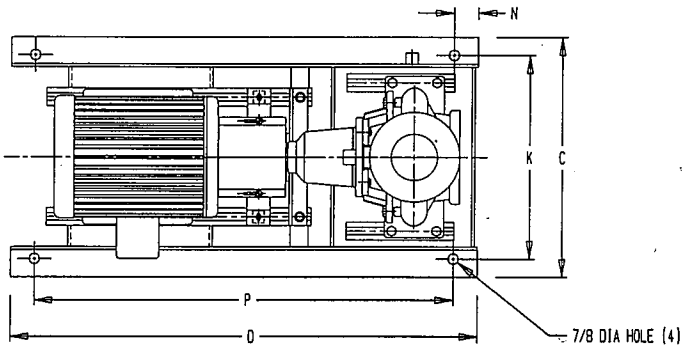

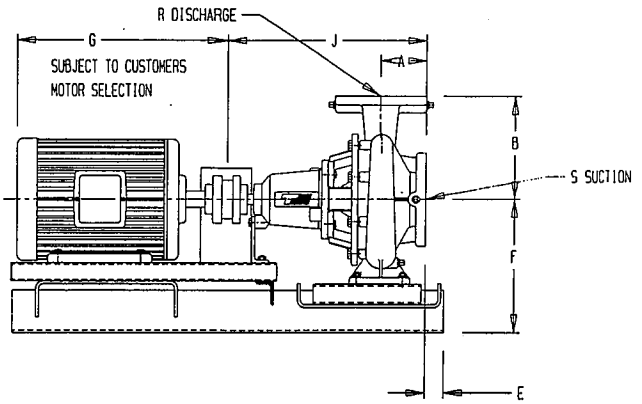

50 Cycle Performance Curves attached when applicable.

Model No.	HP 1160 RPM	HP 1760 RPM	HP 3500 RPM	Motor Frame	A	B	C	D	E	F	J	K	N	P	R	S
1207		1/2, 3/4		56	2-15/16	6-1/8	16	32	1-1/2	8-23/32	15-21/32	14	2	28	1-1/4	2
		1		143T												
		1-1/2	2,3	145T												
			5	182T				36						32		
			7-1/2	184T												
			10	213T												
			15	215T												

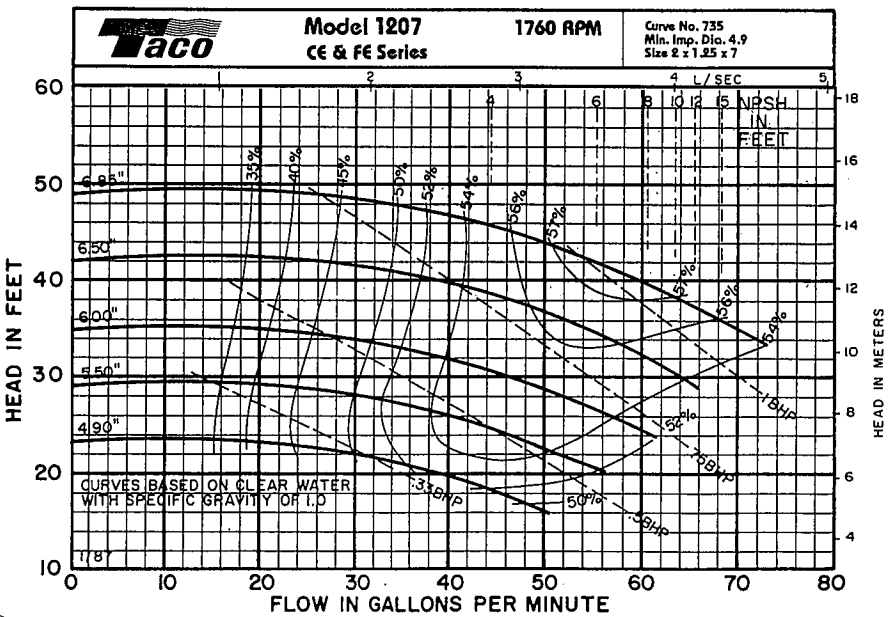

WEIGHT_____PUMP/MOTOR

Item	BRONZE FITTED		ALL IRON	
	Std. Pump Constr.	Optional	Standard	Optional
Casing	Cast Iron ASTM A48 Cl. 35		Cast Iron ASTM A48 Cl. 35	
Impeller	Bronze ASTM B30-4A		Cast Iron ASTM A48 Cl. 35	
Wear Ring	Bronze ASTM B30-4A		Bronze ASTM B30-4A	
Shaft	Carbon Steel AISI 1045	St. Steel AISI 416	Carbon Steel AISI 1045	St. Steel AISI 416
Shaft Sleeve	Bronze SAE 660	St. Steel AISI 416	St. Steel AISI 416	
Mech. Seal	Ceramic	Tungsten Carbide	Ceramic	Tungsten Carbide
Seal Flush Line		Copper		Copper

OPERATING SPECIFICATIONS		
	Standard	Optional
Pressure	175 PSIG*	
Temperature: Mechanical Seal	250F	300F

Motors: All NEMA Standard (T or TS)

* In accordance with ANSI Standard B16.1 Class 125

ADDITIONAL OPTIONS	
Filters	Cuno 5 Micron
Separators	Kynar Cyclone Separator
Couplings	Spacer Type

COMMENTS: _____

TACO, INC., 1160 Cranston Street, Cranston, RI 02920 (401) 942-8000 FAX: (401) 942-2360.
TACO (Canada), Ltd., 1310 Almco Blvd., Mississauga, Ontario L4W1B2. Telephone: 416/625-2160. FAX: 416/625-8616.

Printed in USA
Copyright 1993
TACO, INC.

Submittal Data Information
FE Series Pumps

301-814

EFFECTIVE: MAY 1, 1993 SUPERSEDES: NEW **1760 RPM** MODEL 1208

JOB _____

ENGINEER _____

CONTRACTOR _____ REP. _____

ITEM NO.	MODEL NO.	IMPELLER DIA.	G.P.M.	HEAD/FT.	H.P.	ELEC. CHARS.

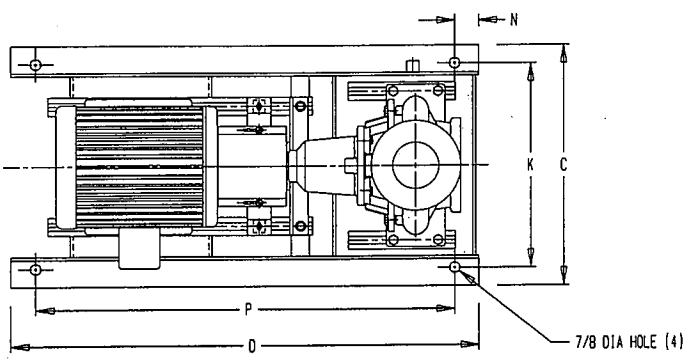

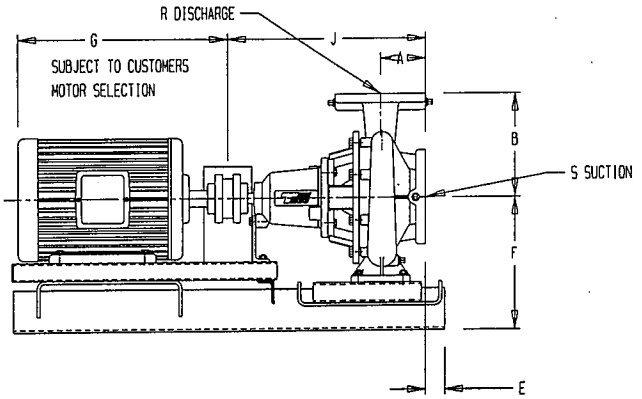

50 Cycle Performance Curves attached when applicable.

Model No.	HP 1160 RPM	HP 1760 RPM	HP 3500 RPM	Motor Frame	A	B	C	D	E	F	J	K	N	P	R	S
1208		1/2, 3/4		56	2-15/16	6-15/16	16	32	1-1/2	9-13/16	15-21/32	14	2	28	1-1/4	2
		1		143T												
		1-1/2,2		145T												
			5	182T				36						32		
			7-1/2	184T												
			10	213T												
			15	215T												

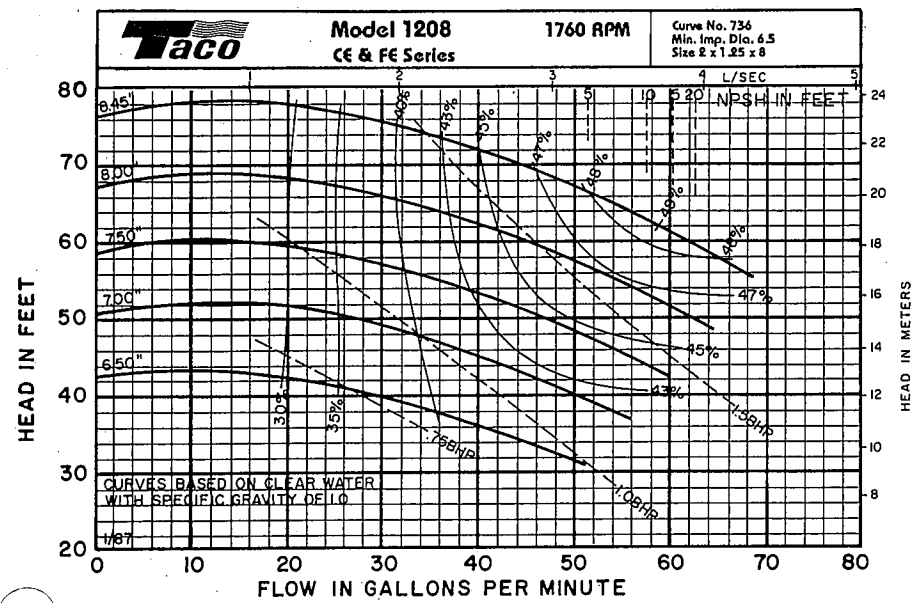

Item	BRONZE FITTED		ALL IRON	
	Std. Pump Constr.	Optional	Standard	Optional
Casing	Cast Iron ASTM A48 Cl. 35		Cast Iron ASTM A48 Cl. 35	
Impeller	Bronze ASTM B30-4A		Cast Iron ASTM A48 Cl. 35	
Wear Ring	Bronze ASTM B30-4A		Bronze ASTM B30-4A	
Shaft	Carbon Steel AISI 1045	St. Steel AISI 416	Carbon Steel AISI 1045	St. Steel AISI 416
Shaft Sleeve	Bronze SAE 660	St. Steel AISI 416	St. Steel AISI 416	
Mech. Seal	Ceramic	Tungsten Carbide	Ceramic	Tungsten Carbide
Seal Flush Line		Copper		Copper

OPERATING SPECIFICATIONS		
	Standard	Optional
Pressure	175 PSIG*	
Temperature: Mechanical Seal	250F	300F

Motors: All NEMA Standard (T or TS)

* In accordance with ANSI Standard B16.1 Class 125

ADDITIONAL OPTIONS	
Filters	Cuno 5 Micron
Separators	Kynar Cyclone Separator
Couplings	Spacer Type

WEIGHT _____ PUMP/MOTOR

COMMENTS: _____

TACO, INC., 1160 Cranston Street, Cranston, RI 02920 (401) 942-8000 FAX: (401) 942-2360.
TACO (Canada), Ltd., 1310 Almco Blvd., Mississauga, Ontario L4W1B2. Telephone: 416/625-2160. FAX: 416/625-8616.

Printed in USA
Copyright 1993
TACO, INC.

Submittal Data Information
FE Series Pumps

301-815

EFFECTIVE: MAY 1, 1993 SUPERSEDES: NEW **1760 RPM** MODEL 1210

JOB _____

ENGINEER _____

CONTRACTOR _____ REP. _____

ITEM NO.	MODEL NO.	IMPELLER DIA.	G.P.M.	HEAD/FT.	H.P.	ELEC. CHARS.

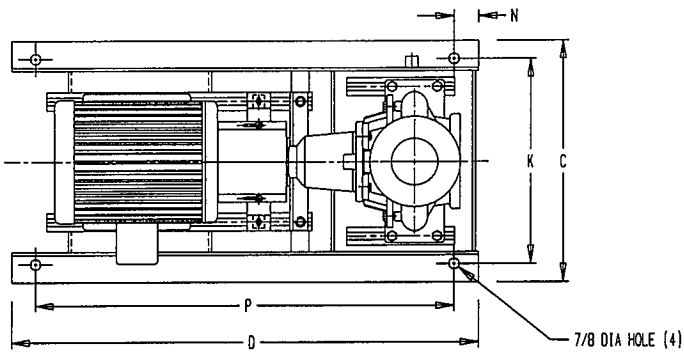

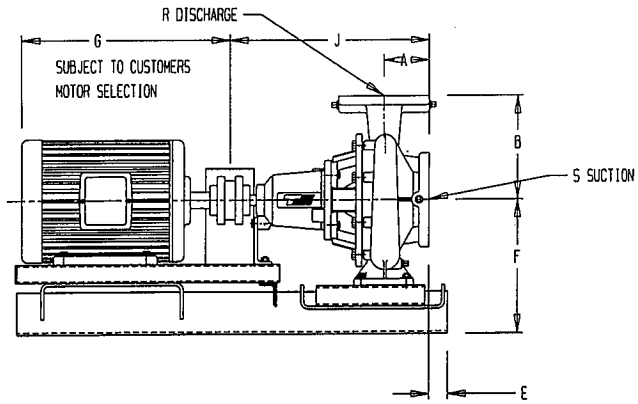

50 Cycle Performance Curves attached when applicable.

Model No.	HP 1160 RPM	HP 1760 RPM	HP 3500 RPM	Motor Frame	A	B	C	D	E	F	J	K	N	P	R	S
1210		3 5		182T 184T	3-3/4	8-11/16	18	42	1-1/2	10-19/32	20-11/32	16	2	38	1-1/4	2

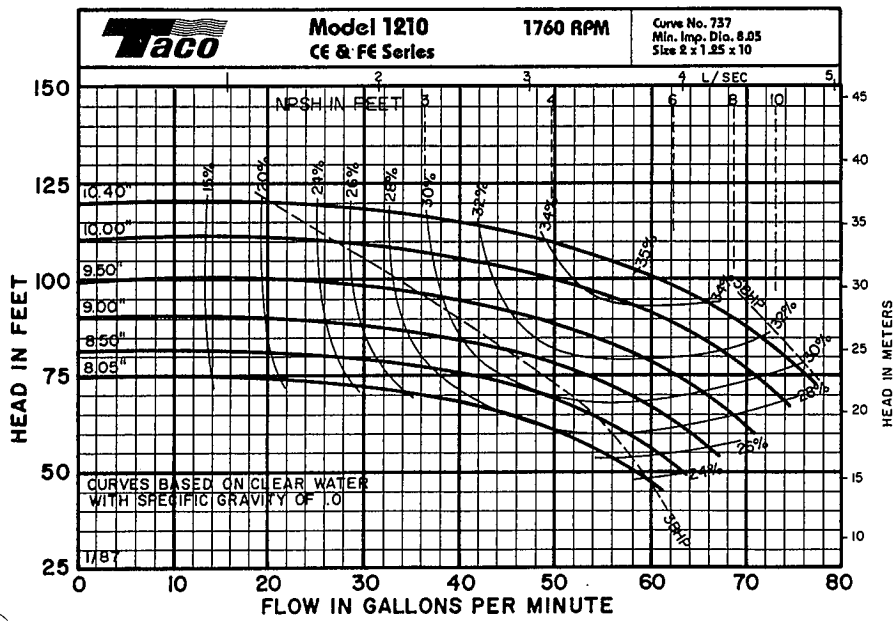

WEIGHT_____PUMP/MOTOR

Item	BRONZE FITTED		ALL IRON	
	Std. Pump Constr.	Optional	Standard	Optional
Casing	Cast Iron ASTM A48 Cl. 35		Cast Iron ASTM A48 Cl. 35	
Impeller	Bronze ASTM B30-4A		Cast Iron ASTM A48 Cl. 35	
Wear Ring	Bronze ASTM B30-4A		Bronze ASTM B30-4A	
Shaft	Carbon Steel AISI 1045	St. Steel AISI 416	Carbon Steel AISI 1045	St. Steel AISI 416
Shaft Sleeve	Bronze SAE 660	St. Steel AISI 416	St. Steel AISI 416	
Mech. Seal	Ceramic	Tungsten Carbide	Ceramic	Tungsten Carbide
Seal Flush Line		Copper		Copper

OPERATING SPECIFICATIONS		
	Standard	Optional
Pressure	175 PSIG*	
Temperature: Mechanical Seal	250F	300F

Motors: All NEMA Standard (T or TS)

* In accordance with ANSI Standard B16.1 Class 125

ADDITIONAL OPTIONS	
Filters	Cuno 5 Micron
Separators	Kynar Cyclone Separator
Couplings	Spacer Type

COMMENTS: _____

TACO, INC., 1160 Cranston Street, Cranston, RI 02920 (401) 942-8000 FAX: (401) 942-2360.
TACO (Canada), Ltd., 1310 Aimco Blvd., Mississauga, Ontario L4W1B2. Telephone: 416/625-2160. FAX: 416/625-8616.

Printed in USA
Copyright 1993
TACO, INC.

Submittal Data Information
FE Series Pumps

301-816

EFFECTIVE: MAY 1, 1993 SUPERSEDES: NEW **1760 RPM** MODEL 1506

JOB _____

ENGINEER _____

CONTRACTOR _____ REP. _____

ITEM NO.	MODEL NO.	IMPELLER DIA.	G.P.M.	HEAD/FT.	H.P.	ELEC. CHARS.

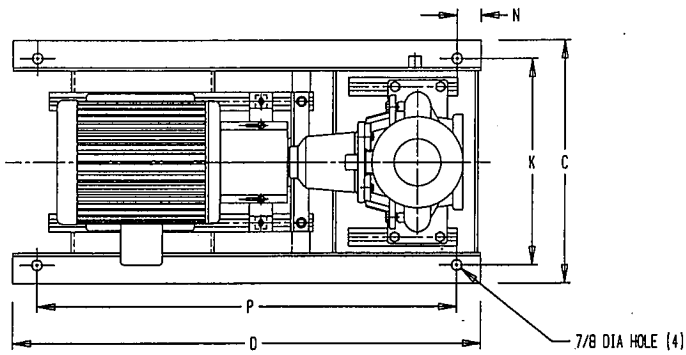

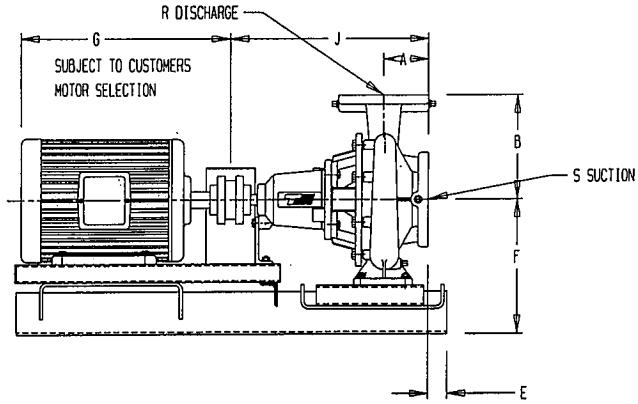

50 Cycle Performance Curves attached when applicable.

Model No.	HP 1160 RPM	HP 1760 RPM	HP 3500 RPM	Motor Frame	A	B	C	D	E	F	J	K	N	P	R	S
1506		1/2, 3/4		56	2-15/16	5-5/16	16	32	1-1/2	7-29/32	15-21/32	14	2	28	1-1/2	2-1/2
		1		143T												
		1-1/2	3	145T												
			5	182T				36						32		
			7-1/2	184T												
			10	213T												
			15	215T												

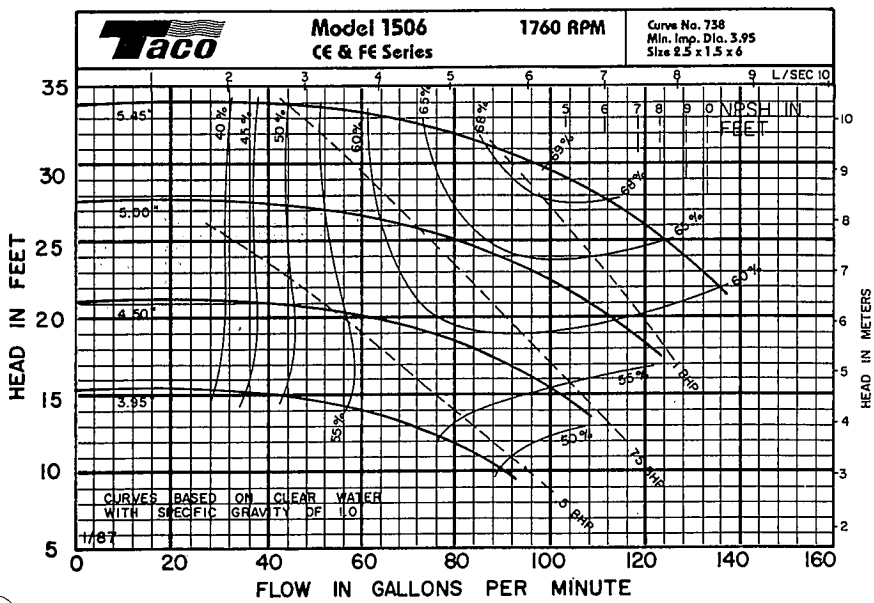

WEIGHT_____PUMP/MOTOR

Item	BRONZE FITTED		ALL IRON	
	Std. Pump Constr.	Optional	Standard	Optional
Casing	Cast Iron ASTM A48 Cl. 35		Cast Iron ASTM A48 Cl. 35	
Impeller	Bronze ASTM B30-4A		Cast Iron ASTM A48 Cl. 35	
Wear Ring	Bronze ASTM B30-4A		Bronze ASTM B30-4A	
Shaft	Carbon Steel AISI 1045	St. Steel AISI 416	Carbon Steel AISI 1045	St. Steel AISI 416
Shaft Sleeve	Bronze SAE 660	St. Steel AISI 416	St. Steel AISI 416	
Mech. Seal	Ceramic	Tungsten Carbide	Ceramic	Tungsten Carbide
Seal Flush Line		Copper		Copper

OPERATING SPECIFICATIONS		
	Standard	Optional
Pressure	175 PSIG*	
Temperature: Mechanical Seal	250F	300F

Motors: All NEMA Standard (T or TS)

* In accordance with ANSI Standard B16.1 Class 125

ADDITIONAL OPTIONS	
Filters	Cuno 5 Micron
Separators	Kynar Cyclone Separator
Couplings	Spacer Type

COMMENTS: _____

TACO, INC., 1160 Cranston Street, Cranston, RI 02920 (401) 942-8000 FAX: (401) 942-2360.
TACO (Canada), Ltd., 1310 Almco Blvd., Mississauga, Ontario L4W1B2. Telephone: 416/625-2160. FAX: 416/625-8616.

Printed in USA
Copyright 1993
TACO, INC.

Submittal Data Information
FE Series Pumps

301-817

EFFECTIVE: MAY 1, 1993 SUPERSEDES: NEW **1760 RPM** MODEL 1507

JOB _____

ENGINEER _____

CONTRACTOR _____ REP. _____

ITEM NO.	MODEL NO.	IMPELLER DIA.	G.P.M.	HEAD/FT.	H.P.	ELEC. CHARS.

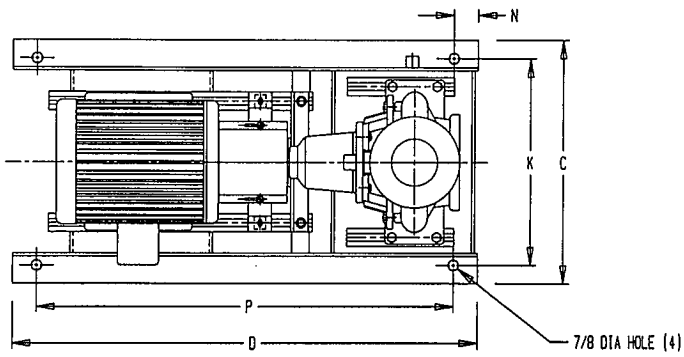

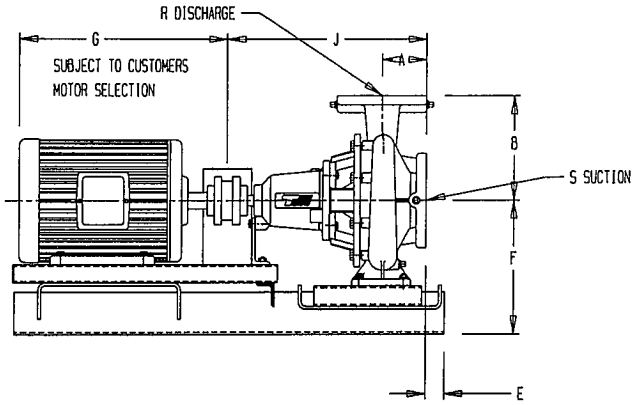

50 Cycle Performance Curves attached when applicable.

Model No.	HP 1160 RPM	HP 1760 RPM	HP 3500 RPM	Motor Frame	A	B	C	D	E	F	J	K	N	P	R	S
1507		1/2, 3/4		56	2-15/16	6-1/8	16	32	1-1/2	8-23/32	15-21/32	14	2	28	1-1/2	2-1/2
		1		143T												
		1-1/2	3	145T												
			5	182T				36						32		
			7-1/2	184T												
			10	213T												
			15	215T												

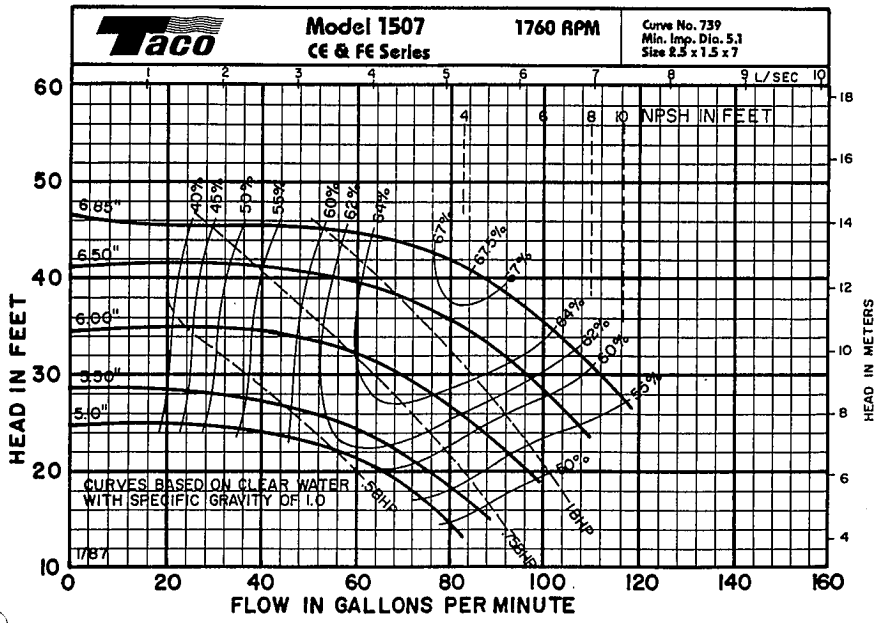

WEIGHT_____PUMP/MOTOR

Item	BRONZE FITTED		ALL IRON	
	Std. Pump Constr.	Optional	Standard	Optional
Casing	Cast Iron ASTM A48 Cl. 35		Cast Iron ASTM A48 Cl. 35	
Impeller	Bronze ASTM B30-4A		Cast Iron ASTM A48 Cl. 35	
Wear Ring	Bronze ASTM B30-4A		Bronze ASTM B30-4A	
Shaft	Carbon Steel AISI 1045	St. Steel AISI 416	Carbon Steel AISI 1045	St. Steel AISI 416
Shaft Sleeve	Bronze SAE 660	St. Steel AISI 416	St. Steel AISI 416	
Mech. Seal	Ceramic	Tungsten Carbide	Ceramic	Tungsten Carbide
Seal Flush Line		Copper		Copper

OPERATING SPECIFICATIONS		
	Standard	Optional
Pressure	175 PSIG*	
Temperature: Mechanical Seal	250F	300F

Motors: All NEMA Standard (T or TS)

* In accordance with ANSI Standard B16.1 Class 125

ADDITIONAL OPTIONS	
Filters	Cuno 5 Micron
Separators	Kynar Cyclone Separator
Couplings	Spacer Type

COMMENTS: _____

TACO, INC., 1160 Cranston Street, Cranston, RI 02920 (401) 942-8000 FAX: (401) 942-2360.
TACO (Canada), Ltd., 1310 Almco Blvd., Mississauga, Ontario L4W1B2. Telephone: 416/625-2160. FAX: 416/625-8616.

Printed in USA
Copyright 1993
TACO, INC.

Submittal Data Information
FE Series Pumps

301-818

EFFECTIVE: MAY 1, 1993 SUPERSEDES: NEW **1760 RPM** MODEL 1508

JOB _____

ENGINEER _____

CONTRACTOR _____ REP. _____

ITEM NO.	MODEL NO.	IMPELLER DIA.	G.P.M.	HEAD/FT.	H.P.	ELEC. CHARS.

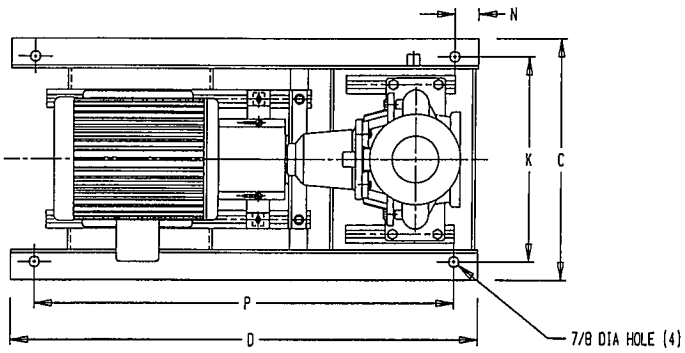

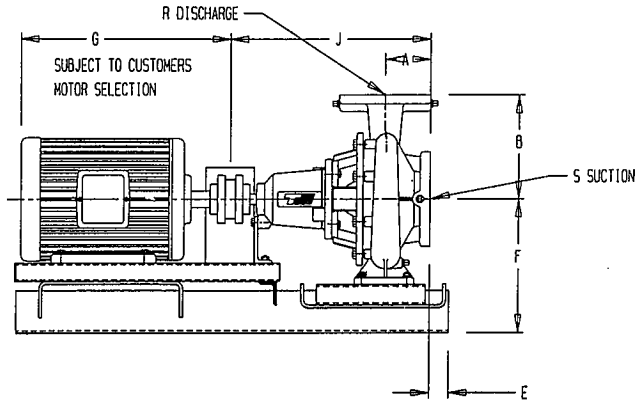

50 Cycle Performance Curves attached when applicable.

Model No.	HP 1160 RPM	HP 1760 RPM	HP 3500 RPM	Motor Frame	A	B	C	D	E	F	J	K	N	P	R	S
1508		1		143T	3-3/4	6-29/32	18	36	1-1/2	9-13/16	16-7/16	16	2	32	1-1/2	2-1/2
		1-1/2,2		145T												
		3		182T												
		5	7-1/2	184T												
			10	213T				42						38		
			15	215T												
			20	254T												
			25	256T												

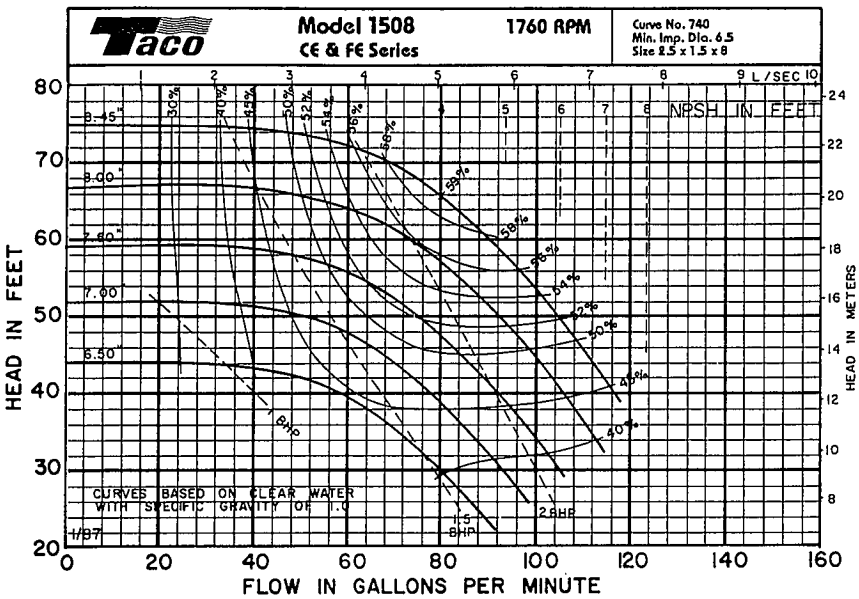

WEIGHT_____PUMP/MOTOR

Item	BRONZE FITTED		ALL IRON	
	Std. Pump Constr.	Optional	Standard	Optional
Casing	Cast Iron ASTM A48 Cl. 35		Cast Iron ASTM A48 Cl. 35	
Impeller	Bronze ASTM B30-4A		Cast Iron ASTM A48 Cl. 35	
Wear Ring	Bronze ASTM B30-4A		Bronze ASTM B30-4A	
Shaft	Carbon Steel AISI 1045	St. Steel AISI 416	Carbon Steel AISI 1045	St. Steel AISI 416
Shaft Sleeve	Bronze SAE 660	St. Steel AISI 416	St. Steel AISI 416	
Mech. Seal	Ceramic	Tungsten Carbide	Ceramic	Tungsten Carbide
Seal Flush Line		Copper		Copper

OPERATING SPECIFICATIONS		
	Standard	Optional
Pressure	175 PSIG*	
Temperature: Mechanical Seal	250F	300F

Motors: All NEMA Standard (T or TS)

* In accordance with ANSI Standard B16.1 Class 125

ADDITIONAL OPTIONS	
Filters	Cuno 5 Micron
Separators	Kynar Cyclone Separator
Couplings	Spacer Type

COMMENTS: _____

TACO, INC., 1160 Cranston Street, Cranston, RI 02920 (401) 942-8000 FAX: (401) 942-2360.
TACO (Canada), Ltd., 1310 Almco Blvd., Mississauga, Ontario L4W1B2. Telephone: 416/625-2160. FAX: 416/625-8616.

Printed in USA
Copyright 1993
TACO, INC.

Submittal Data Information
FE Series Pumps

301-819

EFFECTIVE: MAY 1, 1993 SUPERSEDES: NEW **1760 RPM** MODEL 1510

JOB _____

ENGINEER _____

CONTRACTOR _____ REP. _____

ITEM NO.	MODEL NO.	IMPELLER DIA.	G.P.M.	HEAD/FT.	H.P.	ELEC. CHARS.

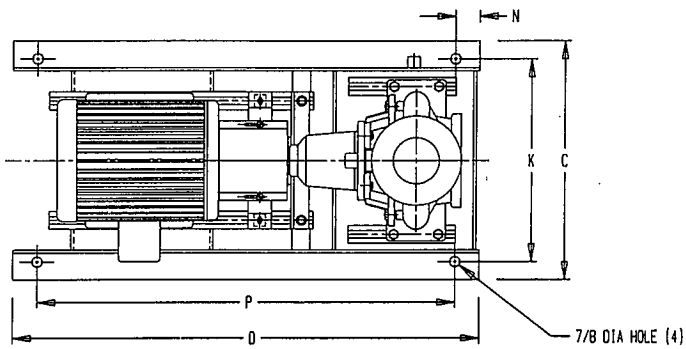

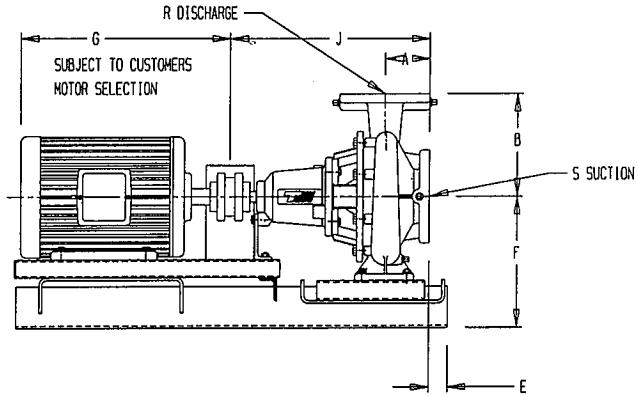

50 Cycle Performance Curves attached when applicable.

Model No.	HP 1160 RPM	HP 1760 RPM	HP 3500 RPM	Motor Frame	A	B	C	D	E	F	J	K	N	P	R	S
1510		1		143T	3-3/4	8-11/16	18	42	1-1/2	10-19/32	20-11/32	16	2	38	1-1/2	2-1/2
		1-1/2,2		145T												
		3		182T												
		5		184T												
		7-1/2		213T												

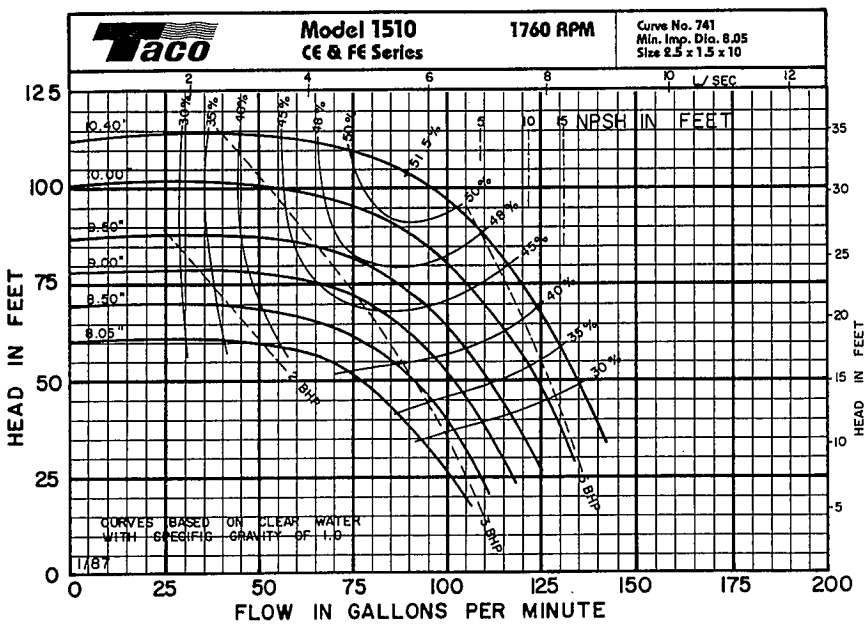

WEIGHT_____PUMP/MOTOR

Item	BRONZE FITTED		ALL IRON	
	Std. Pump Constr.	Optional	Standard	Optional
Casing	Cast Iron ASTM A48 Cl. 35		Cast Iron ASTM A48 Cl. 35	
Impeller	Bronze ASTM B30-4A		Cast Iron ASTM A48 Cl. 35	
Wear Ring	Bronze ASTM B30-4A		Bronze ASTM B30-4A	
Shaft	Carbon Steel AISI 1045	St. Steel AISI 416	Carbon Steel AISI 1045	St. Steel AISI 416
Shaft Sleeve	Bronze SAE 660	St. Steel AISI 416	St. Steel AISI 416	
Mech. Seal	Ceramic	Tungsten Carbide	Ceramic	Tungsten Carbide
Seal Flush Line		Copper		Copper

OPERATING SPECIFICATIONS		
	Standard	Optional
Pressure	175 PSIG*	
Temperature: Mechanical Seal	250F	300F

Motors: All NEMA Standard (T or TS)

* In accordance with ANSI Standard B16.1 Class 125

ADDITIONAL OPTIONS	
Filters	Cuno 5 Micron
Separators	Kynar Cyclone Separator
Couplings	Spacer Type

COMMENTS: _____

TACO, INC., 1160 Cranston Street, Cranston, RI 02920 (401) 942-8000 FAX: (401) 942-2360.
TACO (Canada), Ltd., 1310 Aimco Blvd., Mississauga, Ontario L4W1B2. Telephone: 416/625-2160. FAX: 416/625-8616.

Printed in USA
Copyright 1993
TACO, INC.

Submittal Data Information
FE Series Pumps

301-820

EFFECTIVE: MAY 1, 1993 SUPERSEDES: NEW **1760 RPM** MODEL 2006

JOB _____

ENGINEER _____

CONTRACTOR _____ REP. _____

ITEM NO.	MODEL NO.	IMPELLER DIA.	G.P.M.	HEAD/FT.	H.P.	ELEC. CHARS.

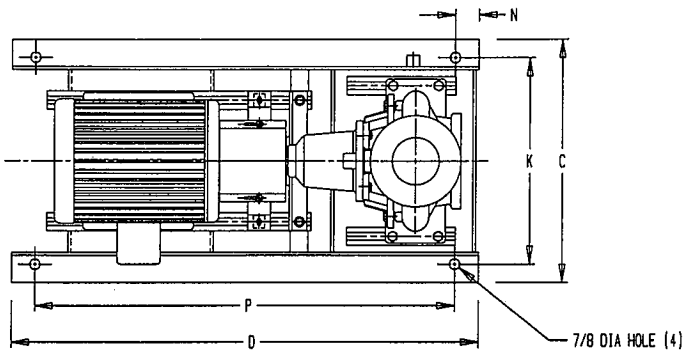

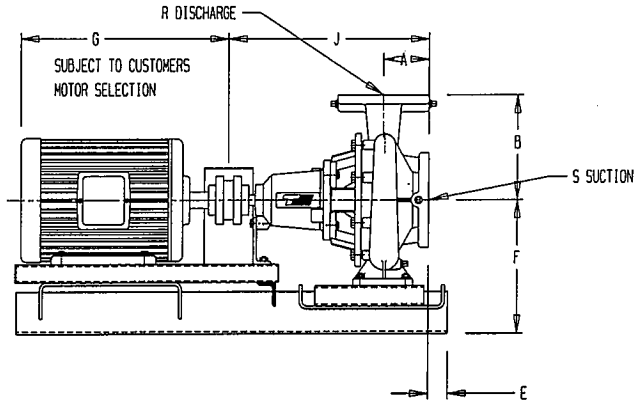

50 Cycle Performance Curves attached when applicable.

Model No.	HP 1160 RPM	HP 1760 RPM	HP 3500 RPM	Motor Frame	A	B	C	D	E	F	J	K	N	P	R	S
2006		3/4		56	3-3/4	6-1/8	16	32	1-1/2	8-23/32	16-7/16	14	2	28	2	2-1/2
		1		143T												
		1-1/2,2		145T												
			5	182T				36						32		
			7-1/2	184T												
			10	213T												
			15	215T												

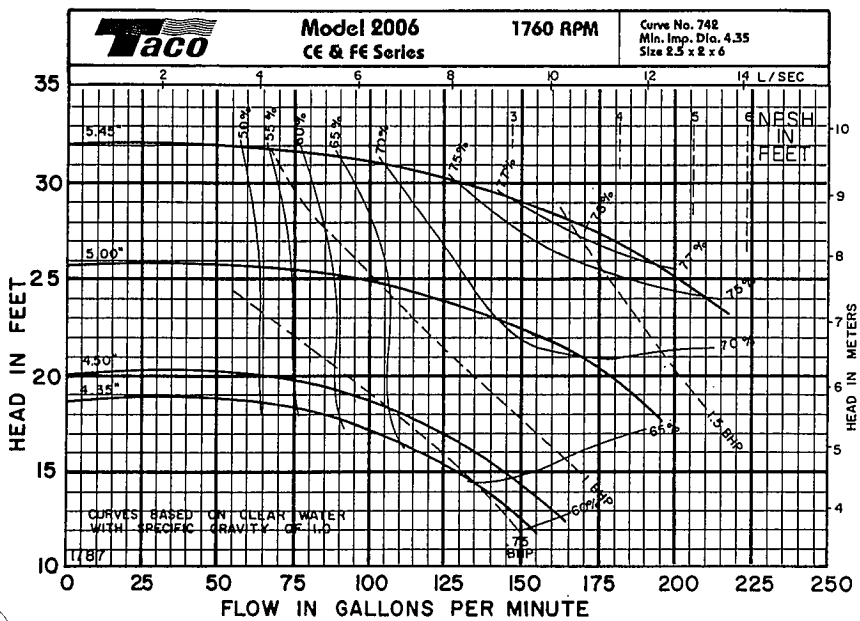

WEIGHT_____PUMP/MOTOR

Item	BRONZE FITTED		ALL IRON	
	Std. Pump Constr.	Optional	Standard	Optional
Casing	Cast Iron ASTM A48 Cl. 35		Cast Iron ASTM A48 Cl. 35	
Impeller	Bronze ASTM B30-4A		Cast Iron ASTM A48 Cl. 35	
Wear Ring	Bronze ASTM B30-4A		Bronze ASTM B30-4A	
Shaft	Carbon Steel AISI 1045	St. Steel AISI 416	Carbon Steel AISI 1045	St. Steel AISI 416
Shaft Sleeve	Bronze SAE 660	St. Steel AISI 416	St. Steel AISI 416	
Mech. Seal	Ceramic	Tungsten Carbide	Ceramic	Tungsten Carbide
Seal Flush Line		Copper		Copper

OPERATING SPECIFICATIONS		
	Standard	Optional
Pressure	175 PSIG*	
Temperature: Mechanical Seal	250F	300F

Motors: All NEMA Standard (T or TS)

* In accordance with ANSI Standard B16.1 Class 125

ADDITIONAL OPTIONS	
Filters	Cuno 5 Micron
Separators	Kynar Cyclone Separator
Couplings	Spacer Type

COMMENTS: _____

TACO, INC., 1160 Cranston Street, Cranston, RI 02920 (401) 942-8000 FAX: (401) 942-2360.
TACO (Canada), Ltd., 1310 Aimco Blvd., Mississauga, Ontario L4W1B2. Telephone: 416/625-2160. FAX: 416/625-8616.

Printed in USA
Copyright 1993
TACO, INC.

Submittal Data Information
FE Series Pumps

301-821

EFFECTIVE: MAY 1, 1993 SUPERSEDES: NEW **1760 RPM** MODEL 2007

JOB _____

ENGINEER _____

CONTRACTOR _____ REP. _____

ITEM NO.	MODEL NO.	IMPELLER DIA.	G.P.M.	HEAD/FT.	H.P.	ELEC. CHARS.

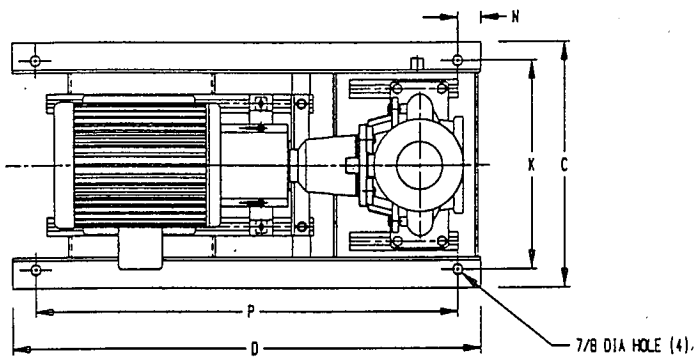

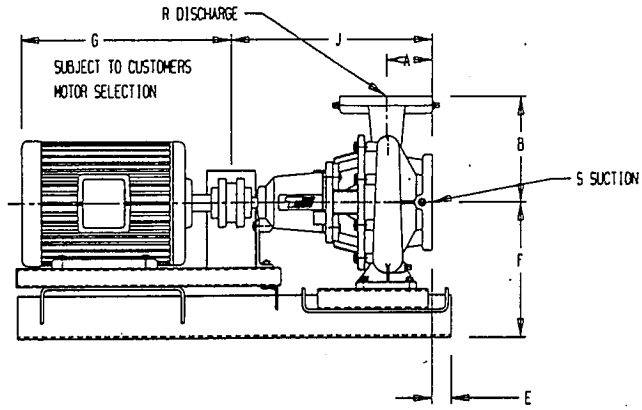

50 Cycle Performance Curves attached when applicable.

Model No.	HP 1160 RPM	HP 1760 RPM	HP 3500 RPM	Motor Frame	A	B	C	D	E	F	J	K	N	P	R	S
2007		1		143T	3-3/4	6-29/32	18	36	1-1/2	9-13/16	16-7/16	16	2	32	2	2-1/2
		1-1/2,2		145T												
		3		182T												
			7-1/2	184T												
			10	213T				42						38		
			15	215T												
			20	254T												
			25	256T												

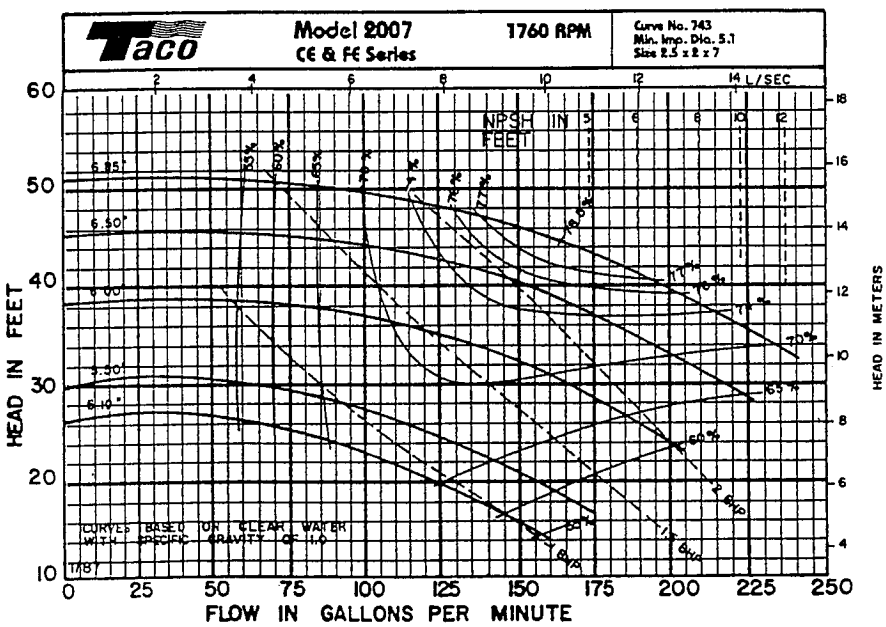

Item	BRONZE FITTED		ALL IRON	
	Std. Pump Constr.	Optional	Standard	Optional
Casing	Cast Iron ASTM A48 Cl. 35		Cast Iron ASTM A48 Cl. 35	
Impeller	Bronze ASTM B30-4A		Cast Iron ASTM A48 Cl. 35	
Wear Ring	Bronze ASTM B30-4A		Bronze ASTM B30-4A	
Shaft	Carbon Steel AISI 1045	St. Steel AISI 416	Carbon Steel AISI 1045	St. Steel AISI 416
Shaft Sleeve	Bronze SAE 660	St. Steel AISI 416	St. Steel AISI 416	
Mech. Seal	Ceramic	Tungsten Carbide	Ceramic	Tungsten Carbide
Seal Flush Line		Copper		Copper

OPERATING SPECIFICATIONS		
	Standard	Optional
Pressure	175 PSIG*	
Temperature: Mechanical Seal	250F	300F

Motors: All NEMA Standard (T or TS)

* In accordance with ANSI Standard B16.1 Class 125

ADDITIONAL OPTIONS	
Filters	Cuno 5 Micron
Separators	Kynar Cyclone Separator
Couplings	Spacer Type

WEIGHT_____PUMP/MOTOR

COMMENTS:_____

TACO, INC., 1160 Cranston Street, Cranston, RI 02920 (401) 942-8000 FAX: (401) 942-2360.
TACO (Canada), Ltd., 1310 Aimco Blvd., Mississauga, Ontario L4W1B2. Telephone: 416/625-2160. FAX: 416/625-8616.

Printed in USA
Copyright 1993
TACO, INC.

Submittal Data Information
FE Series Pumps

301-823

EFFECTIVE: MAY 1, 1993 SUPERSEDES: NEW **1760 RPM** MODEL 2010

JOB _____

ENGINEER _____

CONTRACTOR _____ REP. _____

ITEM NO.	MODEL NO.	IMPELLER DIA.	G.P.M.	HEAD/FT.	H.P.	ELEC. CHARS.

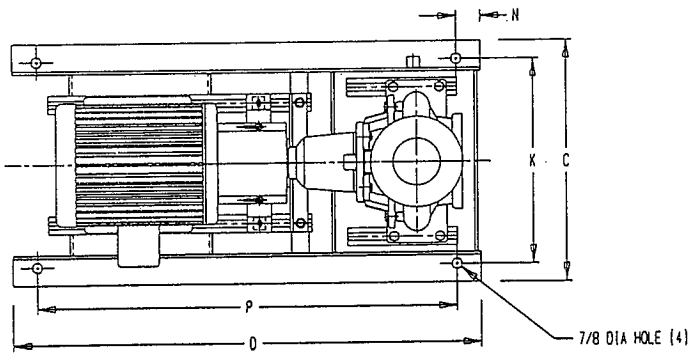

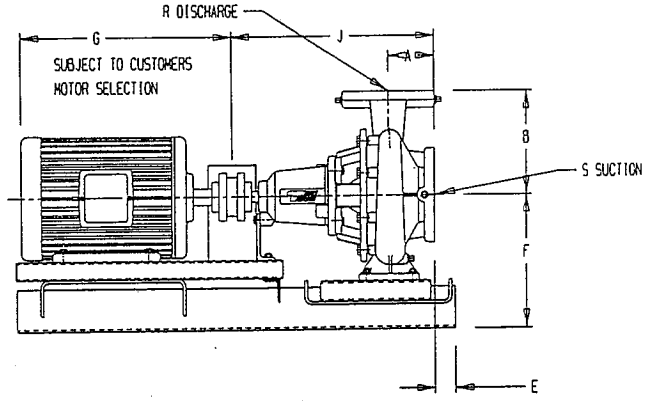

50 Cycle Performance Curves attached when applicable.

Model No.	HP 1160 RPM	HP 1760 RPM	HP 3500 RPM	Motor Frame	A	B	C	D	E	F	J	K	N	P	R	S
2010		1-1/2		143T	3-3/4	8-21/32	18	42	1-1/2	10-19/32	20-11/32	16	2	38	2	2-1/2
		2		145T												
		3		182T												
		5		184T												
		7-1/2		213T												
		10		215T												

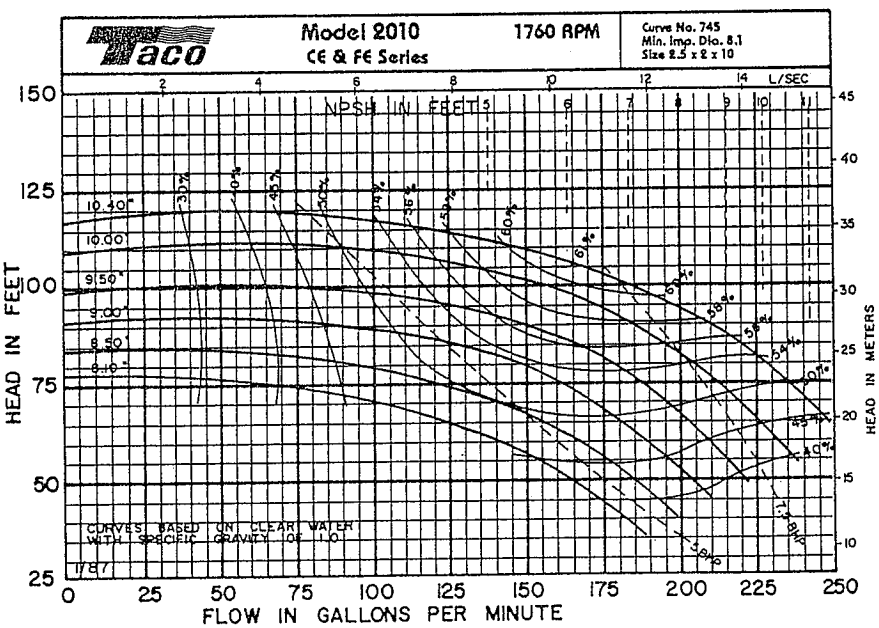

WEIGHT_____PUMP/MOTOR

Item	BRONZE FITTED		ALL IRON	
	Std. Pump Constr.	Optional	Standard	Optional
Casing	Cast Iron ASTM A48 Cl. 35		Cast Iron ASTM A48 Cl. 35	
Impeller	Bronze ASTM B30-4A		Cast Iron ASTM A48 Cl. 35	
Wear Ring	Bronze ASTM B30-4A		Bronze ASTM B30-4A	
Shaft	Carbon Steel AISI 1045	St. Steel AISI 416	Carbon Steel AISI 1045	St. Steel AISI 416
Shaft Sleeve	Bronze SAE 660	St. Steel AISI 416	St. Steel AISI 416	
Mech. Seal	Ceramic	Tungsten Carbide	Ceramic	Tungsten Carbide
Seal Flush Line		Copper		Copper

OPERATING SPECIFICATIONS		
	Standard	Optional
Pressure	175 PSIG*	
Temperature: Mechanical Seal	250F	300F

Motors: All NEMA Standard (T or TS)

* In accordance with ANSI Standard B16.1 Class 125

ADDITIONAL OPTIONS	
Filters	Cuno 5 Micron
Separators	Kynar Cyclone Separator
Couplings	Spacer Type

COMMENTS: _____

TACO, INC., 1160 Cranston Street, Cranston, RI 02920 (401) 942-8000 FAX: (401) 942-2360.
TACO (Canada), Ltd., 1310 Almco Blvd., Mississauga, Ontario L4W1B2. Telephone: 416/625-2160. FAX: 416/625-8616.

Printed in USA
Copyright 1993
TACO, INC.

Submittal Data Information
FE Series Pumps

301-824

EFFECTIVE: MAY 1, 1993 SUPERSEDES: NEW **1760 RPM** MODEL 2506

JOB _____

ENGINEER _____

CONTRACTOR _____ REP. _____

ITEM NO.	MODEL NO.	IMPELLER DIA.	G.P.M.	HEAD/FT.	H.P.	ELEC. CHARS.

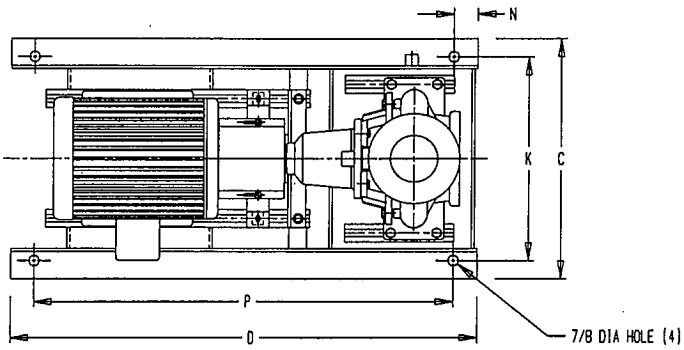

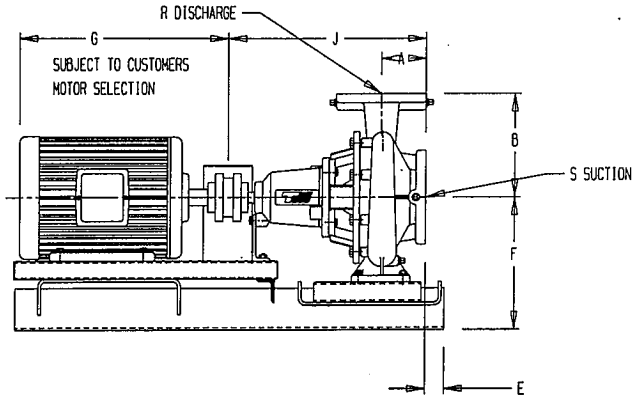

50 Cycle Performance Curves attached when applicable.

Model No.	HP 1160 RPM	HP 1760 RPM	HP 3500 RPM	Motor Frame	A	B	C	D	E	F	J	K	N	P	R	S
2506		1		143T	3-3/4	6-29/32	18	36	1-1/2	9-13/16	16-7/16	16	2	32	2-1/2	3
		1-1/2,2		145T												
		3		182T												
		5		184T												
			10	213T				42						38		
			15	215T												
			20	254T												
			25	256T												

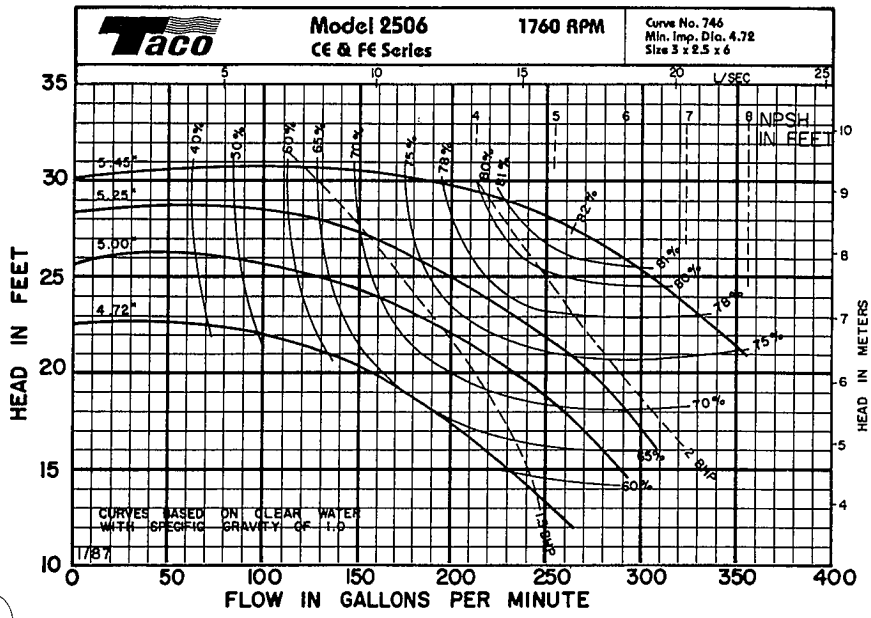

WEIGHT _____ PUMP/MOTOR

Item	BRONZE FITTED		ALL IRON	
	Std. Pump Constr.	Optional	Standard	Optional
Casing	Cast Iron ASTM A48 Cl. 35		Cast Iron ASTM A48 Cl. 35	
Impeller	Bronze ASTM B30-4A		Cast Iron ASTM A48 Cl. 35	
Wear Ring	Bronze ASTM B30-4A		Bronze ASTM B30-4A	
Shaft	Carbon Steel AISI 1045	St. Steel AISI 416	Carbon Steel AISI 1045	St. Steel AISI 416
Shaft Sleeve	Bronze SAE 660	St. Steel AISI 416	St. Steel AISI 416	
Mech. Seal	Ceramic	Tungsten Carbide	Ceramic	Tungsten Carbide
Seal Flush Line		Copper		Copper

OPERATING SPECIFICATIONS		
	Standard	Optional
Pressure	175 PSIG*	
Temperature: Mechanical Seal	250F	300F

Motors: All NEMA Standard (T or TS)

* In accordance with ANSI Standard B16.1 Class 125

ADDITIONAL OPTIONS	
Filters	Cuno 5 Micron
Separators	Kynar Cyclone Separator
Couplings	Spacer Type

COMMENTS: _____

TACO, INC., 1160 Cranston Street, Cranston, RI 02920 (401) 942-8000 FAX: (401) 942-2360.
TACO (Canada), Ltd., 1310 Aimco Blvd., Mississauga, Ontario L4W1B2. Telephone: 416/625-2160. FAX: 416/625-8616.

Printed in USA
Copyright 1993
TACO, INC.

Submittal Data Information
FE Series Pumps

301-826

EFFECTIVE: MAY 1, 1993 SUPERSEDES: NEW **1760 RPM** MODEL 2508

JOB _____

ENGINEER _____

CONTRACTOR _____ REP. _____

ITEM NO.	MODEL NO.	IMPELLER DIA.	G.P.M.	HEAD/FT.	H.P.	ELEC. CHARS.

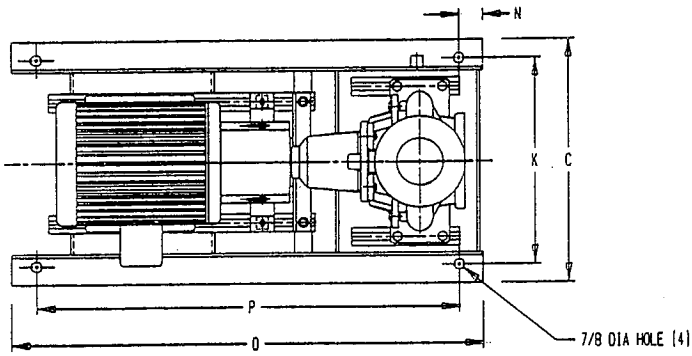

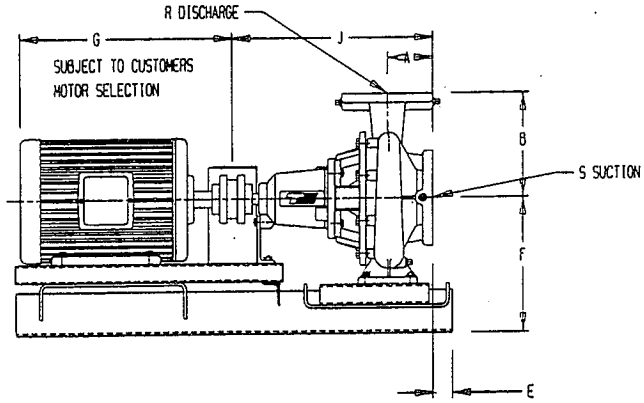

50 Cycle Performance Curves attached when applicable.

Model No.	HP 1160 RPM	HP 1760 RPM	HP 3500 RPM	Motor Frame	A	B	C	D	E	F	J	K	N	P	R	S
2508		3		182T	3-3/4	8-21/32	18	42	1-1/2	10-19/32	20-11/32	16	2	38	2-1/2	3
		5		184T												
		7-1/2		213T												
		10		215T												
			20	254T			22	49				20		45		
			25	256T												
			30	284TS												
			40	286TS												
			50	324TS												
			60	326TS												

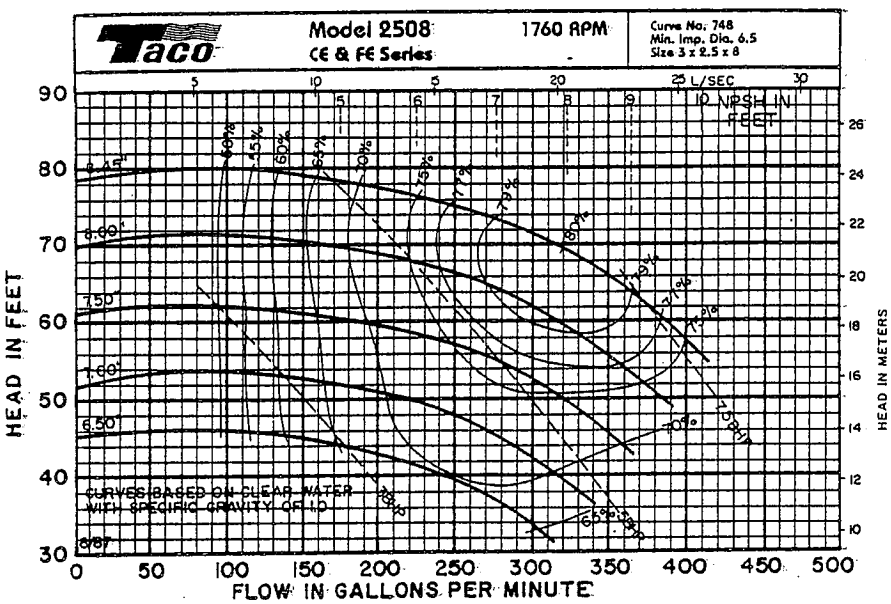

Item	BRONZE FITTED		ALL IRON	
	Std. Pump Constr.	Optional	Standard	Optional
Casing	Cast Iron ASTM A48 Cl. 35		Cast Iron ASTM A48 Cl. 35	
Impeller	Bronze ASTM B30-4A		Cast Iron ASTM A48 Cl. 35	
Wear Ring	Bronze ASTM B30-4A		Bronze ASTM B30-4A	
Shaft	Carbon Steel AISI 1045	St. Steel AISI 416	Carbon Steel AISI 1045	St. Steel AISI 416
Shaft Sleeve	Bronze SAE 660	St. Steel AISI 416	St. Steel AISI 416	
Mech. Seal	Ceramic	Tungsten Carbide	Ceramic	Tungsten Carbide
Seal Flush Line		Copper		Copper

OPERATING SPECIFICATIONS		
	Standard	Optional
Pressure	175 PSIG*	
Temperature: Mechanical Seal	250F	300F

Motors: All NEMA Standard (T or TS)

* In accordance with ANSI Standard B16.1 Class 125

ADDITIONAL OPTIONS	
Filters	Cuno 5 Micron
Separators	Kynar Cyclone Separator
Couplings	Spacer Type

WEIGHT _____ PUMP/MOTOR

COMMENTS: _____

TACO, INC., 1160 Cranston Street, Cranston, RI 02920 (401) 942-8000 FAX: (401) 942-2360.
TACO (Canada), Ltd., 1310 Aimco Blvd., Mississauga, Ontario L4W1B2. Telephone: 416/625-2160. FAX: 416/625-8616.

Printed In USA
Copyright 1993
TACO, INC.

Submittal Data Information
FE Series Pumps

301-827

EFFECTIVE: MAY 1, 1993 SUPERSEDES: NEW **1760 RPM** MODEL 2510

JOB _____

ENGINEER _____

CONTRACTOR _____ REP. _____

ITEM NO.	MODEL NO.	IMPELLER DIA.	G.P.M.	HEAD/FT.	H.P.	ELEC. CHARS.

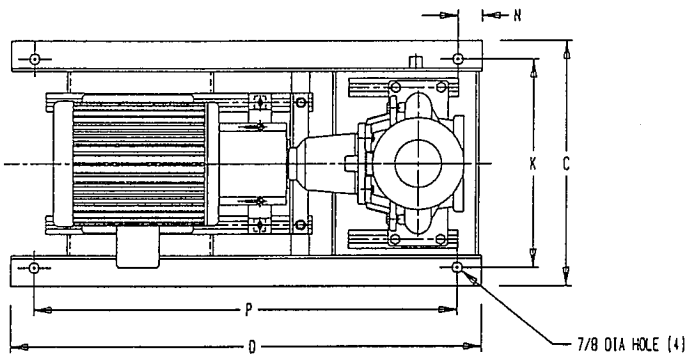

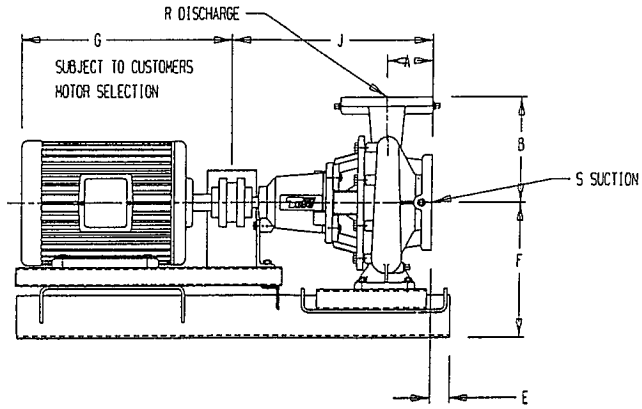

50 Cycle Performance Curves attached when applicable.

Model No.	HP 1160 RPM	HP 1760 RPM	HP 3500 RPM	Motor Frame	A	B	C	D	E	F	J	K	N	P	R	S
2510		5		184T	3-3/4	9-21/32	20	46	1-1/2	11-3/8	20-11/32	18	2	42	2-1/2	3
		7-1/2		213T												
		10		215T												
		15		254T												

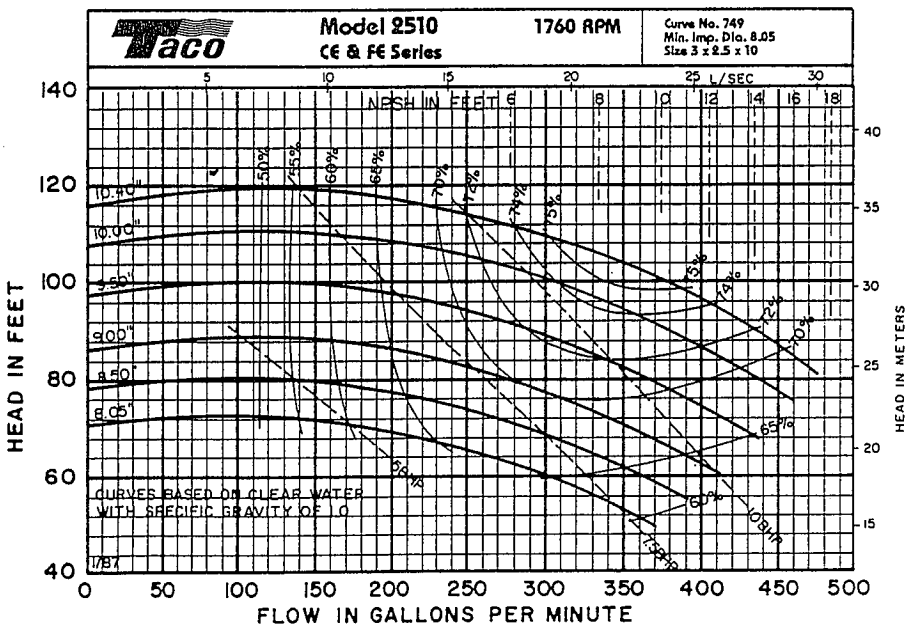

Item	BRONZE FITTED		ALL IRON	
	Std. Pump Constr.	Optional	Standard	Optional
Casing	Cast Iron ASTM A48 Cl. 35		Cast Iron ASTM A48 Cl. 35	
Impeller	Bronze ASTM B30-4A		Cast Iron ASTM A48 Cl. 35	
Wear Ring	Bronze ASTM B30-4A		Bronze ASTM B30-4A	
Shaft	Carbon Steel AISI 1045	St. Steel AISI 416	Carbon Steel AISI 1045	St. Steel AISI 416
Shaft Sleeve	Bronze SAE 660	St. Steel AISI 416	St. Steel AISI 416	
Mech. Seal	Ceramic	Tungsten Carbide	Ceramic	Tungsten Carbide
Seal Flush Line		Copper		Copper

OPERATING SPECIFICATIONS		
	Standard	Optional
Pressure	175 PSIG*	
Temperature: Mechanical Seal	250F	300F

Motors: All NEMA Standard (T or TS)

* In accordance with ANSI Standard B16.1 Class 125

ADDITIONAL OPTIONS	
Filters	Cuno 5 Micron
Separators	Kynar Cyclone Separator
Couplings	Spacer Type

WEIGHT _____ PUMP/MOTOR

COMMENTS: _____

TACO, INC., 1160 Cranston Street, Cranston, RI 02920 (401) 942-8000 FAX: (401) 942-2360.
TACO (Canada), Ltd., 1310 Almco Blvd., Mississauga, Ontario L4W1B2. Telephone: 416/625-2160. FAX: 416/625-8616.

Printed in USA
Copyright 1993
TACO, INC.

Submittal Data Information
FE Series Pumps

301-828

EFFECTIVE: MAY 1, 1993 SUPERSEDES: NEW **1760 RPM** MODEL 2513

JOB _____

ENGINEER _____

CONTRACTOR _____ REP. _____

ITEM NO.	MODEL NO.	IMPELLER DIA.	G.P.M.	HEAD/FT.	H.P.	ELEC. CHARS.

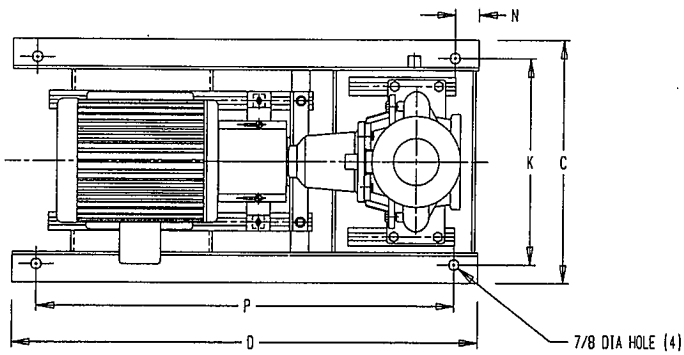

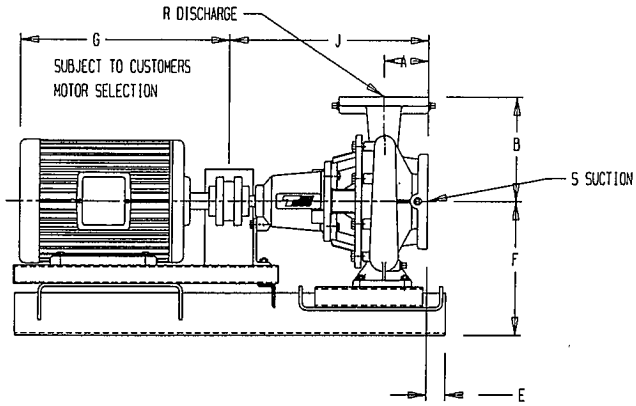

50 Cycle Performance Curves attached when applicable.

Model No.	HP 1160 RPM	HP 1760 RPM	HP 3500 RPM	Motor Frame	A	B	C	D	E	F	J	K	N	P	R	S
2513	2			184T	4-23/32	10-27/32	22	49	1-1/2	12-3/8	22-5/16	20	2	45	2-1/2	3
	3	7-1/2		213T												
	5	10		215T												
	7-1/2	15		254T												
		20		256T												
		25		284T												

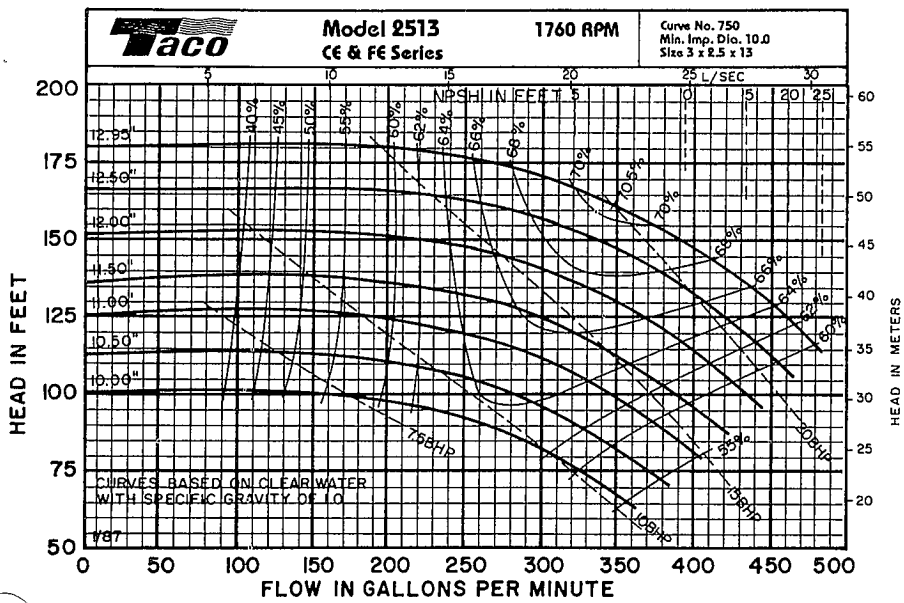

WEIGHT_____PUMP/MOTOR

Item	BRONZE FITTED		ALL IRON	
	Std. Pump Constr.	Optional	Standard	Optional
Casing	Cast Iron ASTM A48 Cl. 35		Cast Iron ASTM A48 Cl. 35	
Impeller	Bronze ASTM B30-4A		Cast Iron ASTM A48 Cl. 35	
Wear Ring	Bronze ASTM B30-4A		Bronze ASTM B30-4A	
Shaft	Carbon Steel AISI 1045	St. Steel AISI 416	Carbon Steel AISI 1045	St. Steel AISI 416
Shaft Sleeve	Bronze SAE 660	St. Steel AISI 416	St. Steel AISI 416	
Mech. Seal	Ceramic	Tungsten Carbide	Ceramic	Tungsten Carbide
Seal Flush Line		Copper		Copper

OPERATING SPECIFICATIONS		
	Standard	Optional
Pressure	175 PSIG*	
Temperature: Mechanical Seal	250F	300F

Motors: All NEMA Standard (T or TS)

* In accordance with ANSI Standard B16.1 Class 125

ADDITIONAL OPTIONS	
Filters	Cuno 5 Micron
Separators	Kynar Cyclone Separator
Couplings	Spacer Type

COMMENTS: _____

TACO, INC., 1160 Cranston Street, Cranston, RI 02920 (401) 942-8000 FAX: (401) 942-2360.
TACO (Canada), Ltd., 1310 Aimco Blvd., Mississauga, Ontario L4W1B2. Telephone: 416/625-2160. FAX: 416/625-8616.

Printed in USA
Copyright 1993
TACO, INC.

Submittal Data Information

FE Series Pumps

301-830

EFFECTIVE: October 6, 2000 SUPERSEDES: 301-830 December 1, 1999 1760 RPM MODEL 3008

JOB _____ ENGINEER _____ CONTRACTOR _____ REP. _____

ITEM NO.	MODEL NO.	IMPELLER DIA.	G.P.M.	HEAD/FT.	H.P.	ELEC. CHARS.

WEIGHT _____ PUMP/MOTOR _____

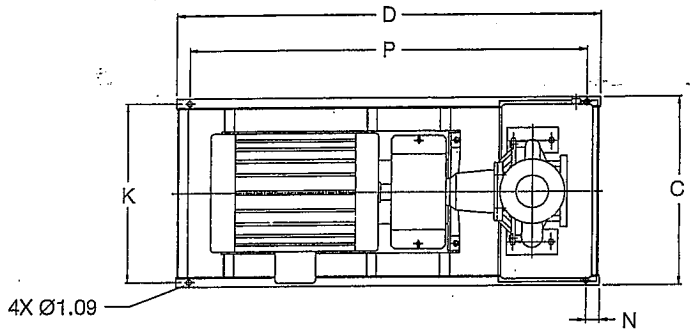

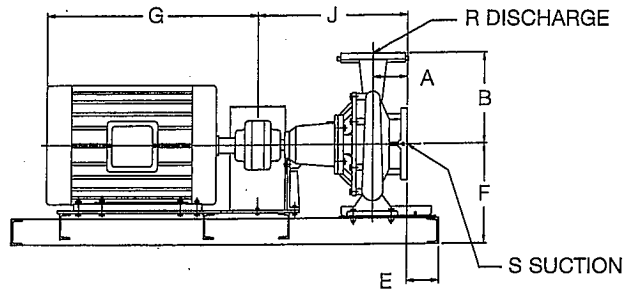

50 Cycle Performance Curves attached when applicable.

Model No.	HP	Motor Frame	A	B	C	D	E	F	J	K	N	P	R	S
3008	5	184T	4.72 (120)	9.64 (245)	23.17 (589)	54.00 (1372)	4.04 (103)	11.40 (290)	21.38 (543)	21.67 (550)	2.00 (51)	50.00 (1270)	3.00 (76)	4.00 (102)
	7.5	213T												
	10	215T												
	15	254T												

English dimensions are in inches. Metric dimensions are in millimeters. Metric data is presented in ( ).

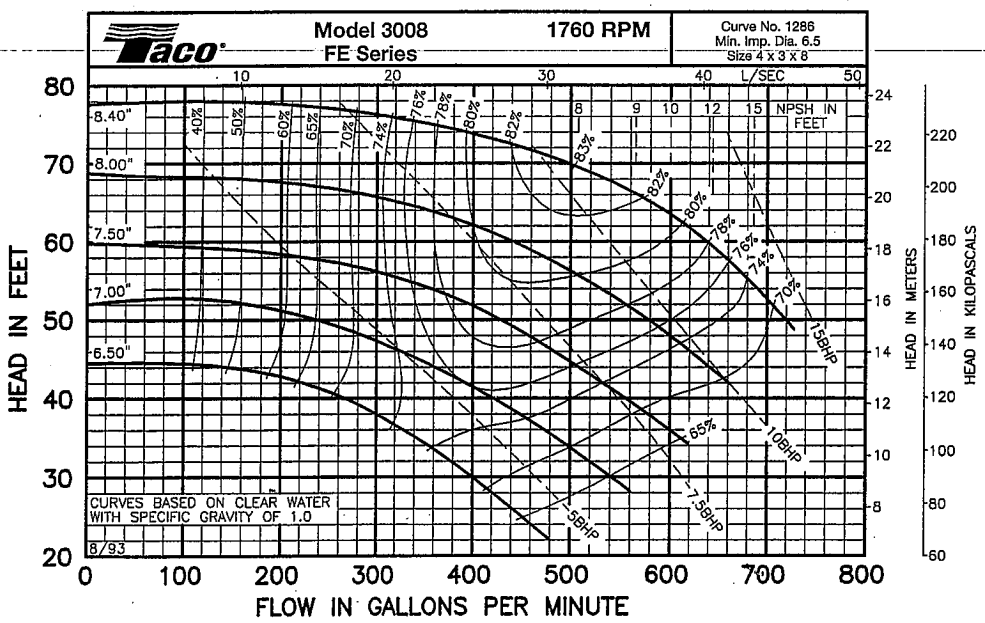

Item	BRONZE FITTED		ALL IRON	
	Std. Pump Constr.	Optional	Standard	Optional
Casing	Cast Iron ASTM A48 Class 35	N/A	Cast Iron ASTM A48 Class 35	N/A
Impeller	Bronze ASTM B584-C836	CF	CF	CF
Wear Ring	Bronze ASTM B584-C836	CF	CF	CF
Shaft	Carbon Steel AISI 1045	St. Steel AISI 416 ASTM A582	Carbon Steel AISI 1045	St. Steel AISI 416 ASTM A582
Shaft Sleeve	Bronze SAE660 B584-C932	St. Steel AISI 303 ASTM A276	St. Steel AISI 303 ASTM A276	CF
Mech. Seal	Ceramic/ EPT	Tungsten Carbide/ EPT/Viton	Ceramic/ EPT	Tungsten Carbide/ EPT/Viton
Seal Flush Line	N/A	Copper	N/A	Stainless Steel

OPERATING SPECIFICATIONS		
	Standard	Optional
Pressure	175 PSIG*	CF
Temperature: Mechanical Seal	250°F	CF

Motors: All NEMA Standard (T or TS)
* In accordance with ANSI Standard B16.1 Class 125
CF - Consult Factory N/A - Not Available
Note: Variable speed applications, consult factory.

ADDITIONAL FEATURES	
Filters	Cuno 5 Micron
Separators	Kynar Cyclone Separator
Couplings	Spacer Type

Comments: _____

Do it Once. Do it Right.

TACO, INC., 1160 Cranston Street, Cranston, RI 02920 Telephone: (401) 942-8000 FAX: (401) 942-2360.
TACO (Canada), Ltd., 6180 Ordan Drive, Mississauga, Ontario L5T 2B3. Telephone: 905/564-9422. FAX: 905/564-9436.
Visit our web site at: http://www.taco-hvac.com

Printed in USA
Copyright 2000
TACO, Inc.

Submittal Data Information
FE Series Pumps

301-831

EFFECTIVE: MAY 1, 1993 SUPERSEDES: NEW **1760 RPM** MODEL 3010

JOB _____

ENGINEER _____

CONTRACTOR _____ REP. _____

ITEM NO.	MODEL NO.	IMPELLER DIA.	G.P.M.	HEAD/FT.	H.P.	ELEC. CHARS.

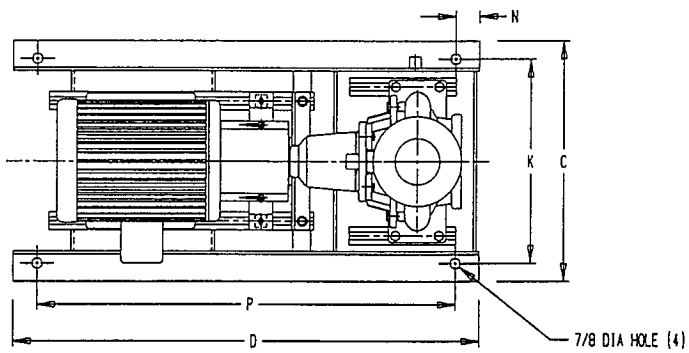

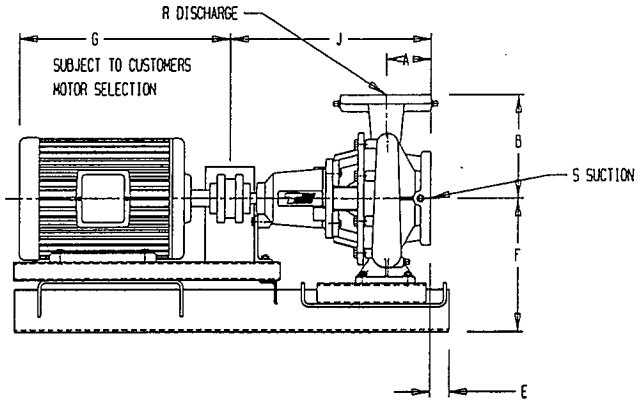

50 Cycle Performance Curves attached when applicable.

Model No.	HP 1160 RPM	HP 1760 RPM	HP 3500 RPM	Motor Frame	A	B	C	D	E	F	J	K	N	P	R	S
3010	2			184T	4-23/32	10-27/32	22	46	1-1/2	11-3/8	21-5/16	20	2	42	3	4
	3	7-1/2		213T												
	5	10		215T												
	7-1/2	15		254T												
		20		256T												
		25		284T												

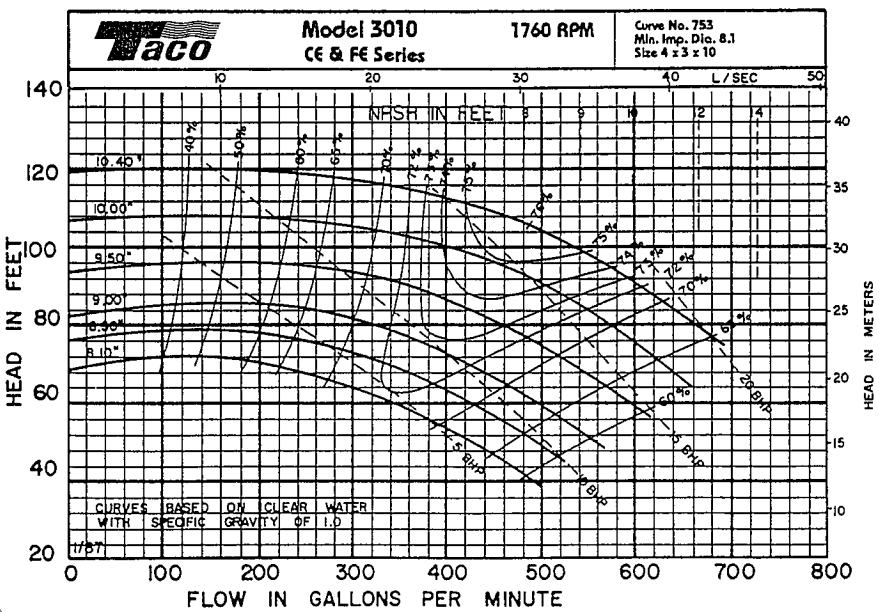

Item	BRONZE FITTED		ALL IRON	
	Std. Pump Constr.	Optional	Standard	Optional
Casing	Cast Iron ASTM A48 Cl. 35		Cast Iron ASTM A48 Cl. 35	
Impeller	Bronze ASTM B30-4A		Cast Iron ASTM A48 Cl. 35	
Wear Ring	Bronze ASTM B30-4A		Bronze ASTM B30-4A	
Shaft	Carbon Steel AISI 1045	St. Steel AISI 416	Carbon Steel AISI 1045	St. Steel AISI 416
Shaft Sleeve	Bronze SAE 660	St. Steel AISI 416	St. Steel AISI 416	
Mech. Seal	Ceramic	Tungsten Carbide	Ceramic	Tungsten Carbide
Seal Flush Line		Copper		Copper

OPERATING SPECIFICATIONS		
	Standard	Optional
Pressure	175 PSIG*	
Temperature: Mechanical Seal	250F	300F

Motors: All NEMA Standard (T or TS)

* In accordance with ANSI Standard B16.1 Class 125

ADDITIONAL OPTIONS	
Filters	Cuno 5 Micron
Separators	Kynar Cyclone Separator
Couplings	Spacer Type

WEIGHT_____PUMP/MOTOR

COMMENTS:_____

TACO, INC., 1160 Cranston Street, Cranston, RI 02920 (401) 942-8000 FAX: (401) 942-2360.
TACO (Canada), Ltd., 1310 Almco Blvd., Mississauga, Ontario L4W1B2. Telephone: 416/625-2160. FAX: 416/625-8616.

Printed in USA
Copyright 1993
TACO, INC.

Submittal Data Information
FE Series Pumps

301-832

EFFECTIVE: MAY 1, 1993 SUPERSEDES: NEW **1760 RPM** MODEL 3013

JOB _____

ENGINEER _____

CONTRACTOR _____ REP. _____

ITEM NO.	MODEL NO.	IMPELLER DIA.	G.P.M.	HEAD/FT.	H.P.	ELEC. CHARS.

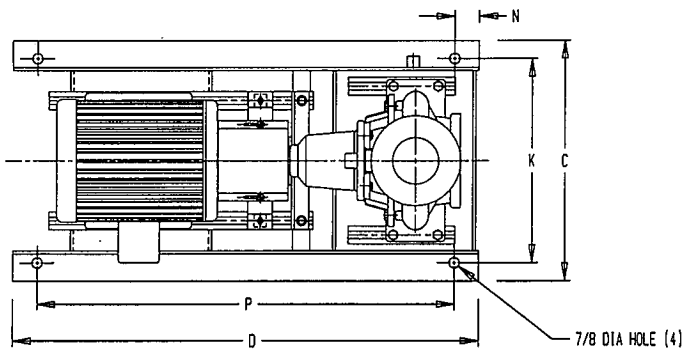

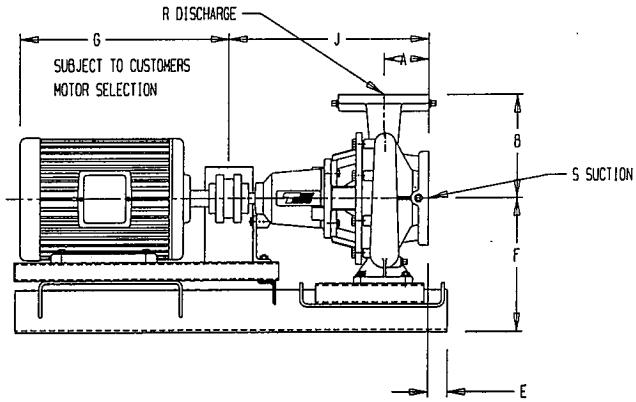

50 Cycle Performance Curves attached when applicable.

Model No.	HP 1160 RPM	HP 1760 RPM	HP 3500 RPM	Motor Frame	A	B	C	D	E	F	J	K	N	P	R	S
3013	3	7-1/2		213T	4-23/32	12-7/32	22	53	1-1/2	13-11/32	22-5/16	20	2	49	3	4
	5	10		215T												
	7-1/2	15		254T												
	10	20		256T												
		25		284T												
		30		286T												
		40		324T												

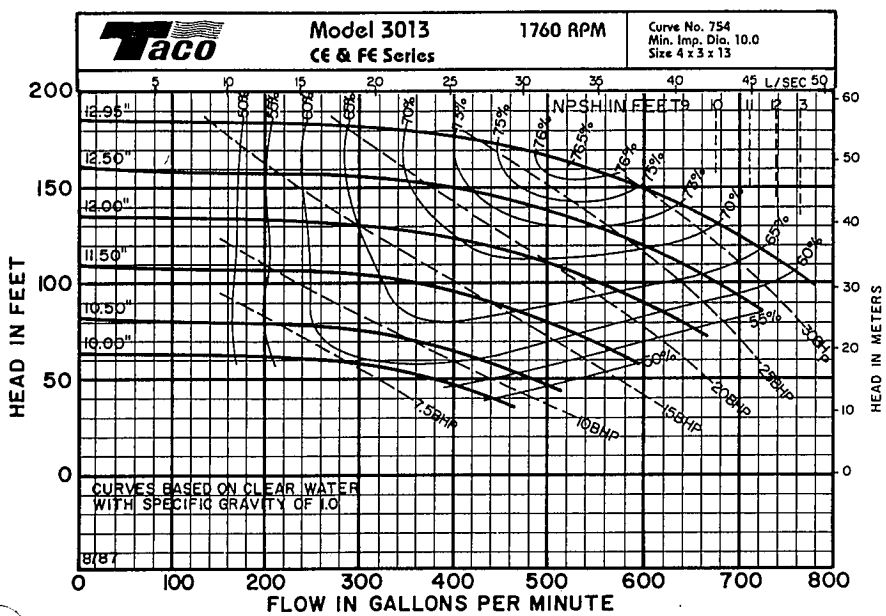

Item	BRONZE FITTED		ALL IRON	
	Std. Pump Constr.	Optional	Standard	Optional
Casing	Cast Iron ASTM A48 Cl. 35		Cast Iron ASTM A48 Cl. 35	
Impeller	Bronze ASTM B30-4A		Cast Iron ASTM A48 Cl. 35	
Wear Ring	Bronze ASTM B30-4A		Bronze ASTM B30-4A	
Shaft	Carbon Steel AISI 1045	St. Steel AISI 416	Carbon Steel AISI 1045	St. Steel AISI 416
Shaft Sleeve	Bronze SAE 660	St. Steel AISI 416	St. Steel AISI 416	
Mech. Seal	Ceramic	Tungsten Carbide	Ceramic	Tungsten Carbide
Seal Flush Line		Copper		Copper

OPERATING SPECIFICATIONS		
	Standard	Optional
Pressure	175 PSIG*	
Temperature: Mechanical Seal	250F	300F

Motors: All NEMA Standard (T or TS)

* In accordance with ANSI Standard B16.1 Class 125

ADDITIONAL OPTIONS	
Filters	Cuno 5 Micron
Separators	Kynar Cyclone Separator
Couplings	Spacer Type

WEIGHT_____PUMP/MOTOR

COMMENTS:_____

TACO, INC., 1160 Cranston Street, Cranston, RI 02920 (401) 942-8000 FAX: (401) 942-2360.
TACO (Canada), Ltd., 1310 Almco Blvd., Mississauga, Ontario L4W1B2. Telephone: 416/625-2160. FAX: 416/625-8616.

Printed in USA
Copyright 1993
TACO, INC.

Submittal Data Information
FE Series Pumps

301-833

EFFECTIVE: MAY 1, 1993 SUPERSEDES: NEW **1760 RPM** MODEL 4008

JOB _____

ENGINEER _____

CONTRACTOR _____ REP. _____

ITEM NO.	MODEL NO.	IMPELLER DIA.	G.P.M.	HEAD/FT.	H.P.	ELEC. CHARS.

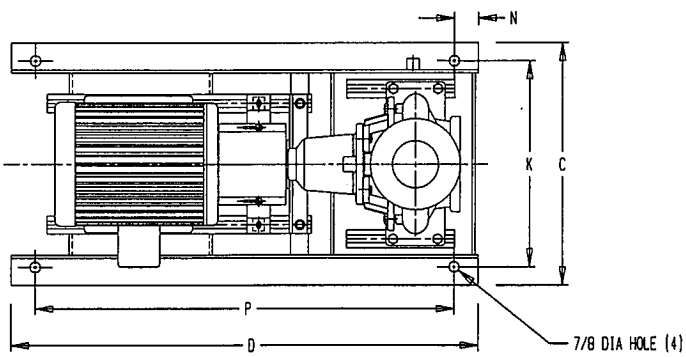

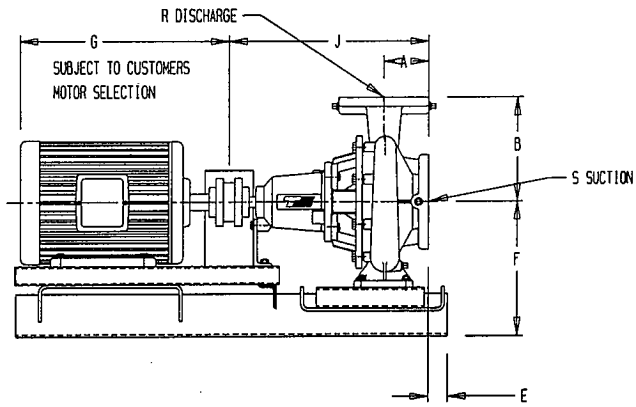

50 Cycle Performance Curves attached when applicable.

Model No.	HP 1160 RPM	HP 1760 RPM	HP 3500 RPM	Motor Frame	A	B	C	D	E	F	J	K	N	P	R	S
4008		5		184T	4-23/32	10-27/32	20	46	1-1/2	11-3/8	21-5/16	18	2	42	4	5
		7-1/2		213T												
		10		215T												
		15		254T												
		20		256T												

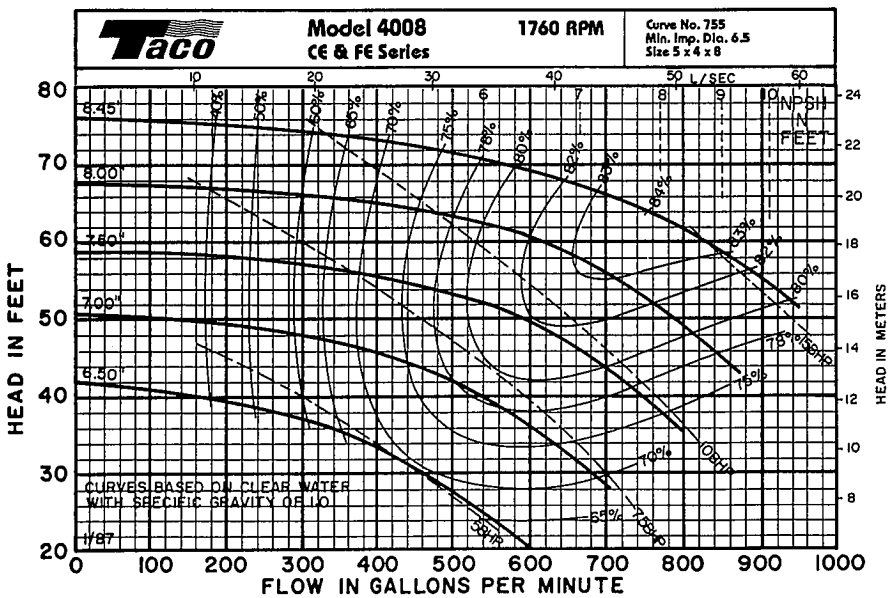

Item	BRONZE FITTED		ALL IRON	
	Std. Pump Constr.	Optional	Standard	Optional
Casing	Cast Iron ASTM A48 Cl. 35		Cast Iron ASTM A48 Cl. 35	
Impeller	Bronze ASTM B30-4A		Cast Iron ASTM A48 Cl. 35	
Wear Ring	Bronze ASTM B30-4A		Bronze ASTM B30-4A	
Shaft	Carbon Steel AISI 1045	St. Steel AISI 416	Carbon Steel AISI 1045	St. Steel AISI 416
Shaft Sleeve	Bronze SAE 660	St. Steel AISI 416	St. Steel AISI 416	
Mech. Seal	Ceramic	Tungsten Carbide	Ceramic	Tungsten Carbide
Seal Flush Line		Copper		Copper

OPERATING SPECIFICATIONS		
	Standard	Optional
Pressure	175 PSIG*	
Temperature: Mechanical Seal	250F	300F

Motors: All NEMA Standard (T or TS)

* In accordance with ANSI Standard B16.1 Class 125

ADDITIONAL OPTIONS	
Filters	Cuno 5 Micron
Separators	Kynar Cyclone Separator
Couplings	Spacer Type

WEIGHT_____PUMP/MOTOR

COMMENTS:_____

TACO, INC., 1160 Cranston Street, Cranston, RI 02920 (401) 942-8000 FAX: (401) 942-2360.
TACO (Canada), Ltd., 1310 Almco Blvd., Mississauga, Ontario L4W1B2. Telephone: 416/625-2160. FAX: 416/625-8616.

Printed in USA
Copyright 1993
TACO, INC.

Submittal Data Information
FE Series Pumps

301-834

EFFECTIVE: MAY 1, 1993 SUPERSEDES: NEW **1760 RPM** MODEL 4010

JOB _____

ENGINEER _____

CONTRACTOR _____ REP. _____

ITEM NO.	MODEL NO.	IMPELLER DIA.	G.P.M.	HEAD/FT.	H.P.	ELEC. CHARS.

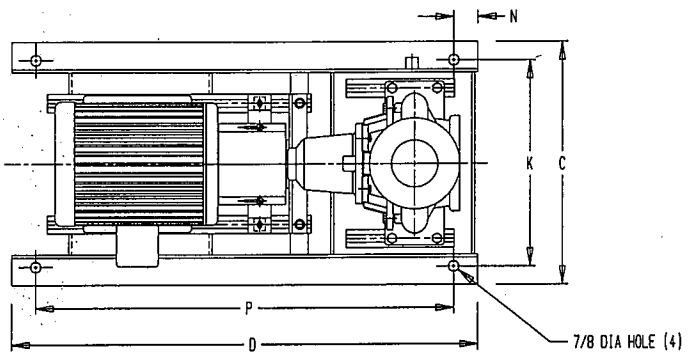

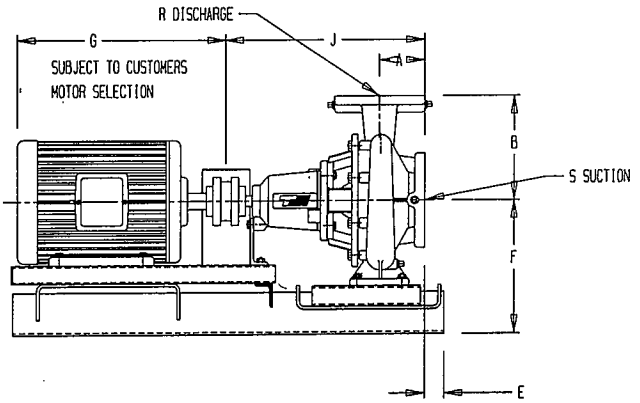

50 Cycle Performance Curves attached when applicable.

Model No.	HP 1160 RPM	HP 1760 RPM	HP 3500 RPM	Motor Frame	A	B	C	D	E	F	J	K	N	P	R	S
4010	3			213T	5-5/16	10-27/32	22	53	1-1/2	12-3/8	23-1/16	20	2	49	4	5
	5	10		215T												
	7-1/2	15		254T												
	10	20		256T												
		25		284T												
		30		286T												

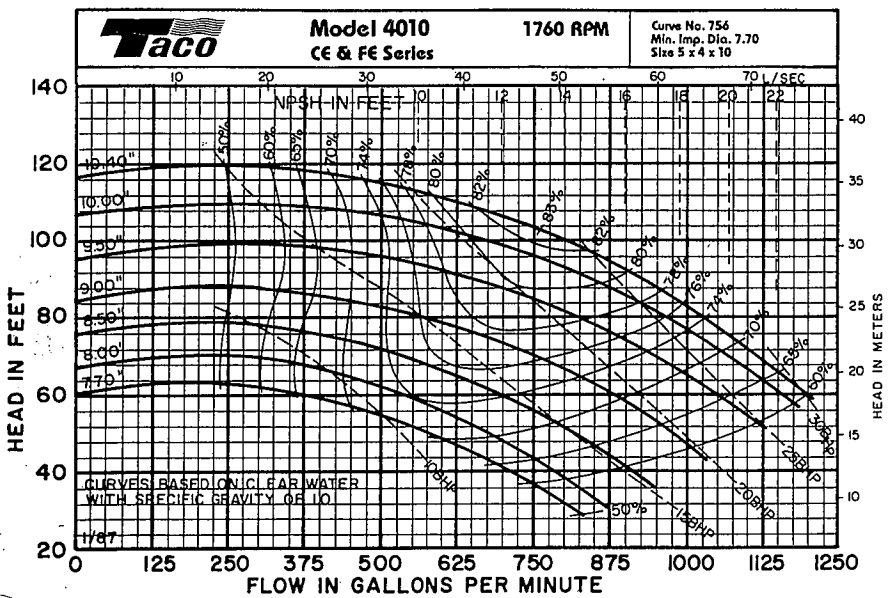

Item	BRONZE FITTED		ALL IRON	
	Std. Pump Constr.	Optional	Standard	Optional
Casing	Cast Iron ASTM A48 Cl. 35		Cast Iron ASTM A48 Cl. 35	
Impeller	Bronze ASTM B30-4A		Cast Iron ASTM A48 Cl. 35	
Wear Ring	Bronze ASTM B30-4A		Bronze ASTM B30-4A	
Shaft	Carbon Steel AISI 1045	St. Steel AISI 416	Carbon Steel AISI 1045	St. Steel AISI 416
Shaft Sleeve	Bronze SAE 660	St. Steel AISI 416	St. Steel AISI 416	
Mech. Seal	Ceramic	Tungsten Carbide	Ceramic	Tungsten Carbide
Seal Flush Line		Copper		Copper

OPERATING SPECIFICATIONS		
	Standard	Optional
Pressure	175 PSIG*	
Temperature: Mechanical Seal	250F	300F

Motors: All NEMA Standard (T or TS)

* In accordance with ANSI Standard B16.1 Class 125

ADDITIONAL OPTIONS	
Filters	Cuno 5 Micron
Separators	Kynar Cyclone Separator
Couplings	Spacer Type

WEIGHT_____PUMP/MOTOR

COMMENTS:_____

TACO, INC., 1160 Cranston Street, Cranston, RI 02920 (401) 942-8000 FAX: (401) 942-2360.
TACO (Canada), Ltd., 1310 Almco Blvd., Mississauga, Ontario L4W1B2. Telephone: 416/625-2160. FAX: 416/625-8616.

Printed in USA
Copyright 1993
TACO, INC.

Submittal Data Information
FE Series Pumps

301-835

EFFECTIVE: MAY 1, 1993 SUPERSEDES: NEW **1760 RPM** MODEL 4013

JOB _____

ENGINEER _____

CONTRACTOR _____ REP. _____

ITEM NO.	MODEL NO.	IMPELLER DIA.	G.P.M.	HEAD/FT.	H.P.	ELEC. CHARS.

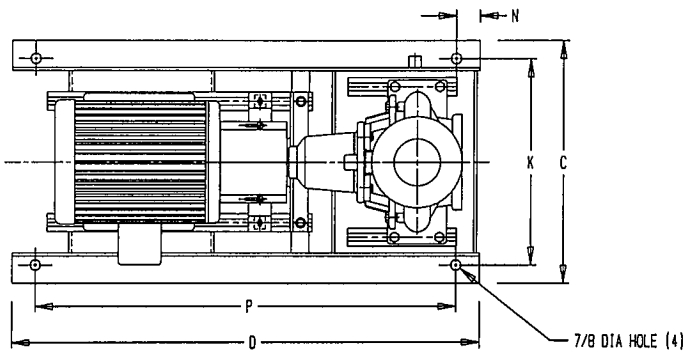

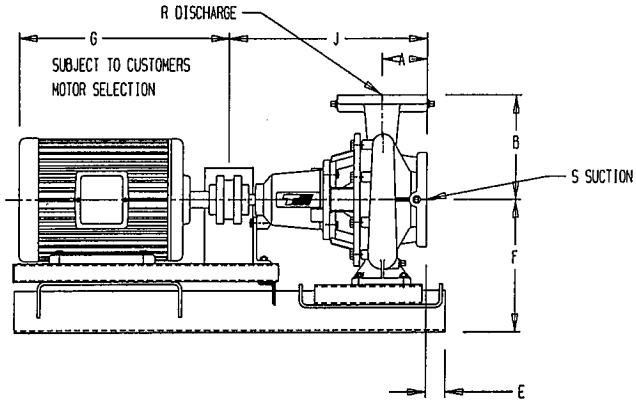

50 Cycle Performance Curves attached when applicable.

Model No.	HP 1160 RPM	HP 1760 RPM	HP 3500 RPM	Motor Frame	A	B	C	D	E	F	J	K	N	P	R	S
4013	5			215T	5-5/16	12-7/32	22	53	1-1/2	13-11/32	22-29/32	20	2	49	4	5
	7-1/2	15		254T												
	10	20		256T												
	15	25		284T												
		30		286T												
		40		324T												
		50		326T												

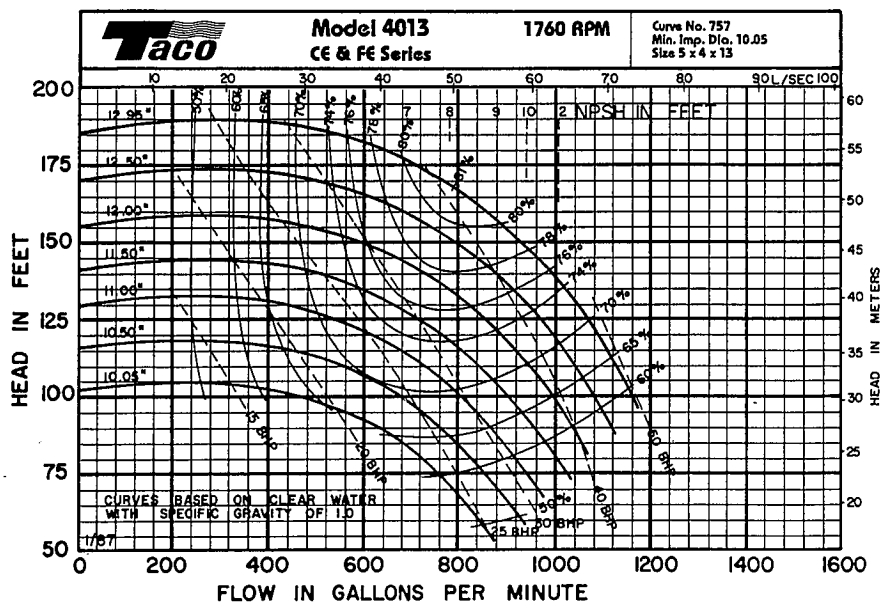

Item	BRONZE FITTED		ALL IRON	
	Std. Pump Constr.	Optional	Standard	Optional
Casing	Cast Iron ASTM A48 Cl. 35		Cast Iron ASTM A48 Cl. 35	
Impeller	Bronze ASTM B30-4A		Cast Iron ASTM A48 Cl. 35	
Wear Ring	Bronze ASTM B30-4A		Bronze ASTM B30-4A	
Shaft	Carbon Steel AISI 1045	St. Steel AISI 416	Carbon Steel AISI 1045	St. Steel AISI 416
Shaft Sleeve	Bronze SAE 660	St. Steel AISI 416	St. Steel AISI 416	
Mech. Seal	Ceramic	Tungsten Carbide	Ceramic	Tungsten Carbide
Seal Flush Line		Copper		Copper

OPERATING SPECIFICATIONS		
	Standard	Optional
Pressure	175 PSIG*	
Temperature: Mechanical Seal	250F	300F

Motors: All NEMA Standard (T or TS)

* In accordance with ANSI Standard B16.1 Class 125

ADDITIONAL OPTIONS	
Filters	Cuno 5 Micron
Separators	Kynar Cyclone Separator
Couplings	Spacer Type

WEIGHT _____ PUMP/MOTOR

COMMENTS: _____

TACO, INC., 1160 Cranston Street, Cranston, RI 02920 (401) 942-8000 FAX: (401) 942-2360.
TACO (Canada), Ltd., 1310 Almco Blvd., Mississauga, Ontario L4W1B2. Telephone: 416/625-2160. FAX: 416/625-8616.

Printed in USA
Copyright 1993
TACO, INC.

Submittal Data Information
FE Series Pumps

301-838

EFFECTIVE: MAY 1, 1993 SUPERSEDES: NEW **1760 RPM** MODEL 5013

JOB _____

ENGINEER _____

CONTRACTOR _____ REP. _____

ITEM NO.	MODEL NO.	IMPELLER DIA.	G.P.M.	HEAD/FT.	H.P.	ELEC. CHARS.

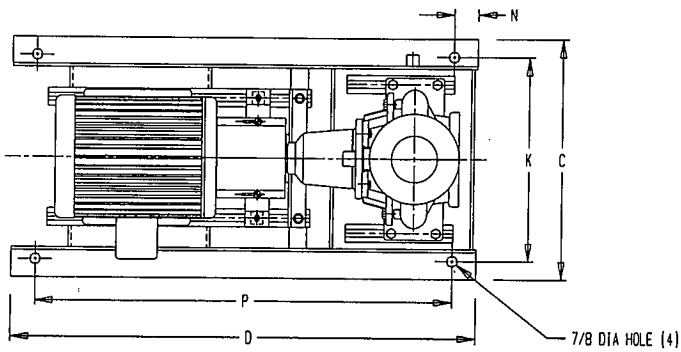

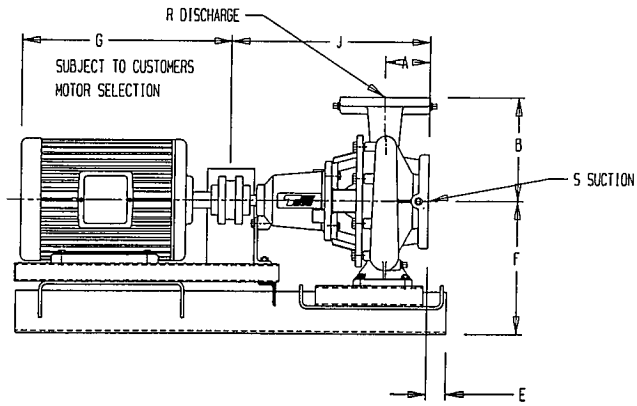

50 Cycle Performance Curves attached when applicable.

Model No.	HP 1160 RPM	HP 1760 RPM	HP 3500 RPM	Motor Frame	A	B	C	D	E	F	J	K	N	P	R	S
5013	5			215T	5-5/16	13-25/32	28	50	1-7/8	14-17/32	22-29/32	25	2	46	5	6
	7-1/2			254T												
	10			256T												
	15	25		284T												
	20	30		286T												
		40		324T				55						51		
		50		326T												
		60		364T												
		75		365T												

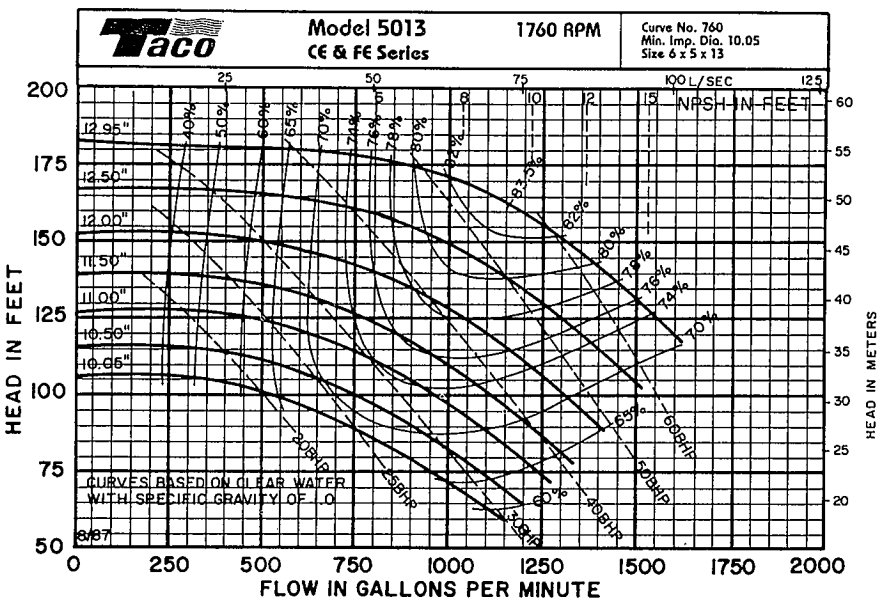

Item	BRONZE FITTED		ALL IRON	
	Std. Pump Constr.	Optional	Standard	Optional
Casing	Cast Iron ASTM A48 Cl. 35		Cast Iron ASTM A48 Cl. 35	
Impeller	Bronze ASTM B30-4A		Cast Iron ASTM A48 Cl. 35	
Wear Ring	Bronze ASTM B30-4A		Bronze ASTM B30-4A	
Shaft	Carbon Steel AISI 1045	St. Steel AISI 416	Carbon Steel AISI 1045	St. Steel AISI 416
Shaft Sleeve	Bronze SAE 660	St. Steel AISI 416	St. Steel AISI 416	
Mech. Seal	Ceramic	Tungsten Carbide	Ceramic	Tungsten Carbide
Seal Flush Line		Copper		Copper

OPERATING SPECIFICATIONS		
	Standard	Optional
Pressure	175 PSIG*	
Temperature: Mechanical Seal	250F	300F

Motors: All NEMA Standard (T or TS)

* In accordance with ANSI Standard B16.1 Class 125

ADDITIONAL OPTIONS	
Filters	Cuno 5 Micron
Separators	Kynar Cyclone Separator
Couplings	Spacer Type

WEIGHT _____ PUMP/MOTOR

COMMENTS: _____

TACO, INC., 1160 Cranston Street, Cranston, RI 02920 (401) 942-8000 FAX: (401) 942-2360.
TACO (Canada), Ltd., 1310 Aimco Blvd., Mississauga, Ontario L4W1B2. Telephone: 416/625-2160. FAX: 416/625-8616.

Printed In USA
Copyright 1993
TACO, INC.